VISIT…

LANZAROTE Caliente.COM

WATCH AND CLOCK MAKING.

BY

DAVID GLASGOW,

VICE-PRESIDENT OF THE BRITISH HOROLOGICAL INSTITUTE.

WITH 69 DIAGRAMS.

CASSELL & COMPANY, LIMITED:

LONDON, PARIS, NEW YORK & MELBOURNE.

[ALL RIGHTS RESERVED.]

1885.

18681. f. 1.

BODLEIAN LIBRARY
6 MAY 85
OXFORD.

PREFACE.

As so many books had lately been published on Watch and Clock Making, it was with some hesitation that I accepted the task of writing this manual. However, on further reviewing the horological literature in our language, it appeared so scant in comparison with the importance and interest of the subject, and so firm was my conviction that the entire absence of any system of technical education was the chief cause of the decadence of the trade in this country (which has been so much felt during the last few years), that I was induced to undertake the work from the desire of promoting the educational movement now going on, and of assisting the rising generation of watchmakers to overcome those difficulties which had proved such stumbling-blocks to myself and others at the outset of our careers.

This volume is intended not only as a text-book for technical classes, but is designed also as a book of reference for the practical workman.

In the introductory sections I have summarily traced the progress of the watch and clock trade down to the present time, and have endeavoured to show by

what very gradual steps real improvements take place or are appreciated. In the remainder of the book I have combined the theoretical treatment with the practical in such a manner as will, I trust, prove both interesting and instructive to the student, although from the limited space at my disposal the whole can be regarded only as a compendium of an almost inexhaustible subject. The principal drawings have been done by my son, who has also generally assisted me in the preparation of the manual.

Want of space has likewise prevented me from adding a few chapters on Watch-Jobbing, as was my original intention. A careful study of the practical portions of the book will, however, enable any workman to repair or replace injured or broken parts of the mechanism in the proper way, and the explanation of the theory and action of the various escapements will direct him in detecting any error or wrong proportions in any given escapement—the most important and difficult task the watch-jobber has to perform.

DAVID GLASGOW.

20, *Myddelton Square, E.C.*

CONTENTS.

CHAPTER I.

TIME MEASURES—CLOCKS.

PAGE

1. Time. 2. A Sidereal Day. 3. A Solar or Civil Day. 4. Mean Solar Time. 5. Tracing a Meridian. 6. Sun-dials and Clepsydræ. 7. Sand-Glasses, Candle Clocks, and Orreries. 8. Wheel Clocks. 9. De Wyck's Clock. 10. Isochronism of the Pendulum. 11. The English Clock Trade. 12. The Westminster Clock 1

CHAPTER II.

WATCHES AND CHRONOMETERS.

13. The Earliest Watches. 14. Hooke's Law. 15. The Clockmakers' Company. 16. Repeating Work. 17. Jewelling and the Horizontal Escapement. 18. Harrison's Marine Timekeeper. 19. Mudge's Chronometer. 20. Arnold's Escapement. 21. The Cylindrical Spring. 22. Earnshaw's Balance. 23. Auxiliary Compensation. 24. Improved Chronometer Balances. 25. Hartnup's Balance. 26. Mercer's Balance. 27. Compensated Watches. 28. Ships' Chronometers. 29. English Watches. 30. Apprentices and Pupils. 31. Machine-made Movements 17

CHAPTER III.

MOVEMENTS.

32. The Movement Trade. 33. The Full Plate. 34. Mr. Wycherley's Improvements. 35. Movement Plates. 36. Screw Making. 37. Pinion Making. 38. Wheel Teeth. 39. Pillar Plates 37

CHAPTER IV.

WHEELS AND PINIONS.

40. Drivers and Followers. 41. Helical Teeth. 42. Construction of Wheel Teeth 44

CHAPTER V.

TRAINS.

43. Trains. 44. Motion Wheels 53

CHAPTER VI.

THE FUSEE AND MAINSPRING.

45. The Fusee. 46. Fusee Stop. 47. Mainsprings. 48. Number of Turns in the Spring. 49. Spring Attachments. 50. Going-barrel and Stop Work. 51. Mainspring Making 63

CHAPTER VII.

CHRONOMETER AND WATCH MAKING.

PAGE

52. Chronometer Finishing. 53. Hooking in the Spring. 54. Planting the Wheels. 55. Stop and Spring. 56. Adjusting-rod. 57. Finishing the Wheels and Pinions. 58. Jewelling. 59. Spotting the Plates. 60. Watch Finishing. 61. Testing the Wheels. 62. Running in the Wheels. 63. The Top Plate. 64. The Barrel Arbor. 65. Hooking in the Spring. 66. Adjusting the Chain. 67. Pivoting. 68. Motion Work. 69. Screws. 70. Suggestions as to Finishing. 71. Applying the Balance Spring 80

CHAPTER VIII.

WATCH EXAMINING.

72. Watch Examining. 73. Fitting the Hands. 74. Attaching the Dial. 75. General Revision. 76. Fixing Movement in Case 103

CHAPTER IX.

JEWELLING WATCHES.

77. Objections to Jewelling. 78. Stones for Jewelling. 79. Hole Making. 80. Jewelling. 81. Snailing. 82. Gilding 110

CHAPTER X.

VERGE AND HORIZONTAL ESCAPEMENTS.

83. What is an Escapement. 84. Verge Escapement. 85. Horizontal Escapement. 86. To Plan a Horizontal Escapement. 87. Parts of the Horizontal Escapement. 88. The Cylinder. 89. Making a Cylinder 123

CHAPTER XI.

DUPLEX ESCAPEMENT.

90. Principle of the Escapement. 91. Angular Measurement of Lift. 92. Running of the Wheel. 93. Duplex Escapement. 94. Escape Wheel. 95. The Escaping Angle. 96. Wheel Teeth. 97. Pallet Roller 137

CHAPTER XII.

CHRONOMETER ESCAPEMENT.

98. Early Forms of the Escapement. 99. Present Form. 100. Lift. 101. Long and Short Detents. 102. System of Manufacture. 103. Marine Chronometer Escapement. 104. Pivots. 105. Locking Stone. 106. The Detent 155

CHAPTER XIII.

POCKET CHRONOMETER.

107. Preparing the Different Parts. 108. Spring Detent. 109. Banking Piece. 110. The Unlocking Spring 169

CHAPTER XIV.

THE LEVER ESCAPEMENT.

PAGE

111. Double Roller Escapement. 112. The Rack Lever. 113. The Detached Lever. 114. The Crank Lever. 115. Table Roller. 116. Two-pin Escapement. 117. The Double Roller. 118. Cole's Resilient Escapement. 119. Cole's Repellent Escapement. 120. The Club-tooth Lever. 121. Straight-line Escapement. 122. Pallets with Circular and Equidistant Lockings. 123. Caliber. 124. Steady-pins. 125. Sinking the Escape-wheel. 126. Balance. 127. The Impulse Pin. 128. The Guard Pin. 129. The Pallet Staff. 130. Lever and Pallets. 131. Escape-wheel 176

CHAPTER XV.

THE BALANCE SPRING.

132. Invention. 133. Hooke's Law. 134. The First Spiral Springs. 135. Different Forms of Spring. 136. Isochronism of Balance Spring. 137. Isochronism and Length of Spring. 138. Compensation. 139. Flat Springs. 140. Correcting the Spring. 141. Glass Springs. 142. Palladium Springs. 143. Demagnetising Steel Work 205

CHAPTER XVI.

SPRING MAKING AND APPLYING TO WATCHES.

144. Testing Spring Wire. 145. To make the Winder. 146. Polishing the Spring. 147. Breguet Spring. 148. Applying the Spring. 149. Pinning on the Spring. 150. Caution about Breguet Spring. 151. Chronometer Spring. 152. Blueing Springs. 153. Applying Spring to Chronometer 217

CHAPTER XVII.

THE COMPENSATION BALANCE.

154. "Middle Temperature Error." 155. Berthoud's Experiments. 156. Effect of Temperature upon Springs. 157. Safe Range of Temperature. 158. Daily Rate of Chronometer. 159. Duration of Test. 160. Airy's Experiments. 161. Hartnup's Suggestions for Checking the Error. 162. Adjustment of Chronometers. 163. The Error of the Compensation Balance 227

CHAPTER XVIII.

PERMANENT COMPENSATION BALANCE.

164. Hardy's Balance. 165. Eiffe's or Molineux's Balance. 166. Dent's Balance. 167. Hartnup's Balance. 168. Poole's Balance. 169. Loseby's Balance. 170. Kullberg's Balance. 171. Kullberg's Improved Balance. 172. Mercer's Balance. 173. Airy's Compensation Bar. 174. Chronometer Balances. 175. Chronometer Trials . . 242

CHAPTER XIX.

KEYLESS WORK.

176. Caron's Keyless Watch. 177. Other Contrivances. 178. Prest's Keyless Work. 179. Swiss Keyless Work. 180. Rocking Bar Keyless Work. 181. Fusee Keyless Work. 182. Kullberg's Fusee Keyless Work. 183. Chalfont's Fusee Keyless Work. 184. The various forms of Keyless Work 258

CHAPTER XX.

PENDULUMS.

PAGE

185. The First Pendulum Clock. 186. Isochronism of the Pendulum. 187. The Circular Error. 188. Time of One Swing of Simple Pendulum. 189. The Centre of Oscillation. 190. Suspension of Pendulum. 191. Pendulum Cock. 192. Pendulum Bobs. 193. Barometric Error. 194. Regulation 274

CHAPTER XXI.

COMPENSATION PENDULUMS.

195. Ratio of Expansion of Metals. 196. Mercurial Compensation Pendulum. 197. The Gridiron Pendulum. 198. Wood and Zinc, or Wood and Lead, Pendulum. 199. Zinc and Steel Compensation 285

CHAPTER XXII.

ESCAPEMENTS.

200. Recoil Escapement. 201. Pin Wheel Escapement. 202. Deadbeat (Graham) Escapement. 203. Conditions of Isochronous Vibration. 204. Frodsham's Tables 292

CHAPTER XXIII.

GRAVITY ESCAPEMENTS.

205. Double Three-legged Gravity Escapement. 206. Four-legged Gravity Escapement. 207. Electrical Clocks. 208. Jones's System of Controlling Clocks. 209. Ritchie's Electrical Clock Escapement . 308

CHAPTER XXIV.

HOUSE CLOCKS.

210. Various kinds of Clocks. 211. Eight-day Clocks. 212. The Striking Train. 213. Quarter Clocks. 214. Astronomical Clocks or Regulators. 215. Turret Clocks 319

LIST OF ILLUSTRATIONS.

PAGE

Fig. 1.—Transit Instrument 3
Fig. 2.—Generating Circles for Epicycloid and Hypocycloid . 46
Fig. 3.—Bevelled Wheels (diagram) 52
Fig. 4.—Fusee and Barrel with Chain attached 63
Fig. 5.—The Fusee 64
Fig. 6.—A, Ordinary Going Barrel and Stop Work; B, Improved Going Barrel; C, Stop Piece 76
Fig. 7.—Adjusting-rod 83
Fig. 8.—Old-fashioned Swiss Stud 102
Fig. 9.—Jewel Hole 116
Fig. 10.—Verge Escapement 125
Fig. 11.—Horizontal or Cylinder Escapement 128
Fig. 12.—Horizontal Escapement (diagram) 130
Fig. 13.—Tool for Running in Cylinder 134
Fig. 14.—Tool for measuring Heights 136
Fig. 15.—Duplex Escapement:—I. Plan and elevation; II. Action of impulse 138
Fig. 16.—Angular Measurement of Lift 140
Fig. 17.—Diagram—Proportions of Wheel and Pallet . . 142
Fig. 18.—Ditto ditto ditto 143
Fig. 19.—Ditto ditto ditto 144
Fig. 20.—Action of Escape Wheel, with Roller, &c., of correct proportions 147
Fig. 21.—Action of Wheel with too large a Roller 148
Fig. 22.—Action of Wheel with too small a Roller 149
Fig. 23.—Chronometer Escapement (plan) 156
Fig. 24.—Chronometer Escapement (elevation) 157
Fig. 25.—Diagram—Second Order of Lever 159
Fig. 26.—Tool for measuring Heights 164
Fig. 27.—Conical Pivot 165
Fig. 28.—Pivot with Enlarged End 166
Fig. 29.—Double Roller Lever Escapement:—I. Plan; II. Elevation 177
Fig. 30.—Rack Lever 179

PAGE
Fig. 31.—Crank Lever 181
Fig. 32.—Two-pin Lever Escapement 183
Fig. 33.—Cole's Resilient Escapement 186
Fig. 34.—Straight-line Lever Escapement, with Club Teeth . 189
Fig. 35.—Circular Pallets 191
Fig. 36.—Pallets with Equidistant Lockings 192
Fig. 37.—Equidistant Locking *v.* Circular Pallets (diagram) . 193
Fig. 38.—Pallets, with Semi-equidistant Lockings 194
Fig. 39.—Guard Pin in Lever (diagram) 201
Fig. 40.—1, Ordinary Volute; 2, Cylindrical Helical; 3, Breguet Spring 208
Fig. 41.—1, Box-cover; 2, Spring-box; 3, Screw for Fixing Wire; 4, Plan of Winder-pivot; 5, Winder . . . 218
Fig. 42.—To polish Outer Sides of Coils 219
Fig. 43.—To polish Inner Sides of Coils 220
Fig. 44.—Winder for Breguet Spring 220
Fig. 45.—Diagram 230
Fig. 46.—Ordinary Compensation Balance with sliding weights . 243
Fig. 47.—Hardy's Balance 244
Fig. 48.—Eiffe's or Molineux's Balance 245
Fig. 48A.—Eiffe's or Molineux's Balance 245
Fig. 49.—Dent's Balance 247
Fig. 50.—Hartnup's Balance 248
Fig. 51.—Poole's Auxiliary 250
Fig. 52.—Loseby's Balance 252
Fig. 53.—Kullberg's Flat-rim Balance 253
Fig. 54.—Kullberg's Improved Balance 254
Fig. 55.—Mercer's Balance 256
Fig. 56.—Prest's Keyless Work 259
Fig. 57.—Swiss Keyless Work 261
Fig. 58.—Rocking Bar Keyless Work 264
Fig. 59.—Fusee Keyless Work 268
Fig. 60.—Kullberg's Fusee Keyless Work 271
Fig. 61.—Chalfont's Fusee Keyless Work 273
Fig. 62.—Mercurial Compensation Pendulum 286
Fig. 63.—Recoil Escapement 294
Fig. 64.—Pin Wheel Escapement 296
Fig. 65.—Dead Beat (Graham) Escapement 298
Fig. 66.—Double Three-legged Gravity Escapement 309
Fig. 67.—Jones's System of Controlling Clocks 314
Fig. 68.—Ritchie's Electrical Clock Escapement 317

WATCH AND CLOCK MAKING.

CHAPTER I.

TIME MEASURES—CLOCKS.

1. **Time.**—Two fundamental ideas form the basis of all investigations in physical phenomena: these are duration and extension, or time and space. Both are conceived by us as unbounded, continuous, and indefinitely divisible. We can conceive of them existing without matter, for if the whole material universe were destroyed, time and space would remain. Neither, however, could be *measured* without the existence of matter. Portions of space can be considered only by reference to material things, and portions of time only by means of motion. Measured time may be defined as the perceived number of successive movements. In other words, *time* is duration, as set out by certain periods and marked by certain measures and epochs.

The measures of time are days, months, years, and cycles; and, for the convenience of the ordinary routine and business of life, man has from time immemorial subdivided the natural periods into shorter, and what may be called mathematical, periods, such as hours, minutes, and seconds; for the recording and measuring of which, the different machines used in horology have been invented and constructed.

Amongst the primitive nations the sub-divisions of the day were always more or less marked. The ancient Romans divided it into four parts, while in most civilised countries it is now divided into twenty-four

hours, which are each sub-divided into sixty minutes, each of which contains sixty seconds. Our clocks and watches are marked for twelve hours only, which are twice counted.

The Italians reckon from one to twenty-four (which is also the mode of reckoning in our observatories with astronomical clocks), while the Chinese divide the day into twelve hours only, each of which is equal to two of ours.

A day is the time of the complete rotation of the earth on its axis, either with reference to the stars or to the sun.

2. **A Sidereal Day.**—The interval between successive transits of the same star is termed a *sidereal day.* It is the true period of the earth's rotation. It is ascertained with great exactness by the ordinary observations of astronomers, and is, as far as we know, invariable. It is the standard by which all clock time is finally regulated, and is daily taken at observatories by observing particular stars by means of a transit instrument: *i.e.*, a telescope fixed at right angles across a stiff axis with pivots at the ends, which is laid horizontally east and west on firm supports, thus allowing the telescope to move only in the plane of the meridian (Fig. 1). It has wires stretched vertically across the focus, and it is by the sun or particular stars being observed to pass this meridian that we measure whole days.

(For a full description of the transit instrument and its uses, see "A Treatise on the Transit Instrument as applied to the Determination of Time," by Latimer Clark, M.I.C.E., &c., and "Transit Tables for 1884, giving the Transit of the Sun and of certain Stars for every Day in the Year, computed from the 'Nautical Almanac' for Popular Use," by the same author. London: Alfred J. Frost, 6, Westminster Chambers, Victoria Street, S.W.)

Mr. Clark, in his treatise, gives the following instructions for using the transit instrument:—

"The direct result of a transit observation anywhere

made is the local time at that spot, but by adding a certain constant, which never varies, we convert this into Greenwich time. This constant depends on our longitude

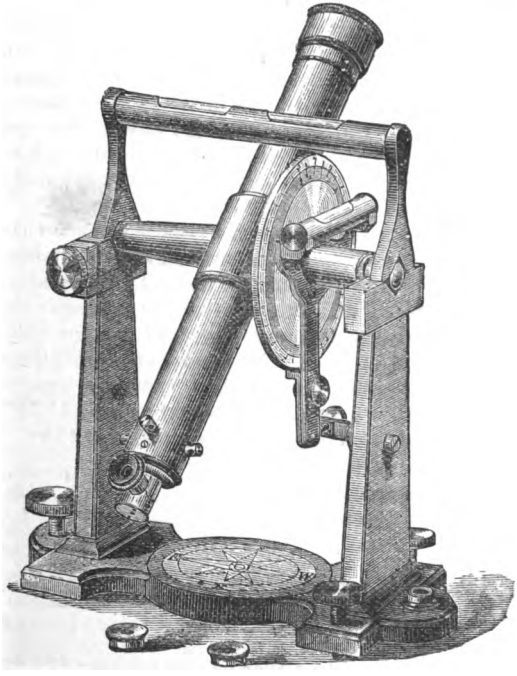

Fig. 1.—Transit Instrument.

east or west of Greenwich. The first requisite is, therefore, to find to what extent our station is either east or west of Greenwich, or, in other words, to take our longitude by means of a map. Let us, for the present, assume our station to be at Marlow, which is 3′ 5″ in time west of Greenwich.

"The Transit Tables give us, with minute accuracy, the time at which the sun passes across the meridian of Greenwich, *i.e.*, the time at which the sun is due south at Greenwich, for every day in the year. Now, since our longitude is 3′ 5″ west of Greenwich, the sun will pass every day over our meridian at Marlow 3′ 5″ after it has passed over the meridian at Greeewich. We have thus merely to add 3′ 5″ to the times given in the table, and we have for every day in the year the instant at which the sun will be due south at Marlow, and this is the time which should be shown by our clock at that instant, if it is right.

"The sun's motion in the heavens is so slow that it is scarcely perceptible to the unassisted eye, but when seen through a telescope, the motion, as well as its size, are so much magnified, that the instant of its passage over the wires of the telescope can be observed within the fraction of a second of time. As an example of its use, we observe by our watch on March 1 that the sun passed over the middle wire of our telescope at 14′ 32″ past 12. We find by our tables that on this day the

	H.	M.	S.
Sun souths at Greenwich at . .	12	12	30.82
Add for our longitude . . .		3	5
	12	15	35.82
But the time shown by our watch was	12	14	32
Difference . . .		1	3.82

"It is thus evident that our watch was 1′ 3.82″ too slow.

"The tables give in a similar manner for every evening the instant of southing of most of the principal stars. Their rapid motion across the wires of the telescope insures great accuracy in determining the time of their transit, and as the tables give not only the time of their southing, but also the altitude of the stars at the time they pass the meridian, their identification is insured by

means of the graduated circle attached to the instrument on which altitudes are measured. As an example of the process, we observe that on March 2 the bright star *a* Tauri crossed the centre wire of our telescope at 5° 50′ 50″ according to our watch. We find in our tables that on this day *a* Tauri southed at

	H.	M.	S.
Greenwich at	5	47	31.7
It will therefore south at Marlow on account of longitude later . .		3	5
	5	50	36.7
By our watch the transit occurred at .	5	50	50
Difference . .			13.3

"Our watch was evidently therefore 13′ 3″ too fast."

The duration of a sidereal day is 23 hours, 56 minutes, 3 seconds.

3. **A Solar or Civil Day** is the time between the transits of the sun over the meridian on two successive days; but as the sun revolves relatively in the same direction as the earth rotates [of course, strictly speaking, it is the earth which revolves round the sun; it is only apparently that the sun moves round us], the sun requires nearly 3 minutes, 56 seconds on the average longer than any particular star to bring him up to the same meridian on every successive day; there is therefore one more actual or sidereal day in the year than there are solar days.

There are two causes which render the lengths of solar days unequal. The first is the variable velocity of the earth in its orbit, which is an ellipse, having the sun not in the centre but at a focus, and in which the earth moves slowest when it is farthest from the sun, or in apogee, and quickest when nearest the sun, or in perigee. And the second is the fact that the earth does not move (or, which is the same thing, the sun does not seem to move) in the plane of the earth's equator, but in a plane inclined to it. The apparent path of the sun in the heavens is called the *ecliptic*, and the second of the

causes making the solar day of variable length may therefore be described as the obliquity of the ecliptic.

4. **Mean Solar Time.**—A mean solar day is the average length of all the solar days in the year, which is 24 hours. Conceive an imaginary sun moving uniformly in a circle in the plane of the earth's equator so as to coincide with the real sun when their paths (the ecliptic and celestial equator) cross each other, and therefore so that the year as marked by the imaginary and real suns is exactly of the same length. Then the imaginary sun will mark the *mean solar day.* The difference between true and mean time is called the equation of time.

There are only four days in the year when the apparent and mean time are the same, and the equation of time nothing. These are December 24th, April 15th, June 15th, and August 31st. Between December 24th and April 15th, and between June 15th and August 31st the apparent is always before the mean time, whilst in the remaining intervals it is later; the almanacs generally give it "clock before" and "clock after" sun.

5. **Tracing a Meridian.**—The equator, and any circle on the earth parallel to the equator, contains 360 degrees, each of which is divided into 60 minutes, which are again divided into 60 seconds. Circles passing through poles dividing the equator and all parallel circles into degrees are called *lines of longitude.* Places in the same line of longitude have their noon or midday at the same instant; hence these lines are called *meridians of longitude.*

As the earth rotates once in 24 hours and there are 360 degrees of longitude, each degree of longitude = 4 minutes; so that for ascertaining the local time at any place it is only necessary to add or subtract for the distance east or west of the meridian that is chosen for reference. The meridian of Greenwich is the one now almost universally used as the initial meridian. It is important to know how to find the directions of the

meridian at any spot. Ferguson gives the following directions for tracing a meridian :—

"Make four or five concentric circles, a quarter of an inch from one another, on a flat board about a foot in breadth, and let the outmost circle be but little less than the board will contain. Fix a pin perpendicularly in the centre, and of such a length that its whole shadow may fall within the innermost circle for at least four hours in the middle of the day. The pin ought to be about the eighth part of an inch thick, with a round blunt point. The board being set exactly level in a place where the sun shines, suppose from eight in the morning till four in the afternoon, about which hours the end of the shadow should fall within all the circles; watch the times in the afternoon, when the extremity of the shortening shadow just touches the several circles, and there make marks. Then in the afternoon of the same day, watch the lengthening shadow, and when its end touches the several circles in going over them make marks also. Lastly, with a pair of compasses, find exactly the middle points between the two marks on any circles, and draw a straight line from the centre to that point, which line will be covered at noon by the shadow of a small upright wire, which should be put in place of the pin. The reason for drawing several circles is, that in case one part of the day should prove clear, and the other part somewhat cloudy, if you miss the time when the point of the shadow should touch one circle, you may perhaps catch it in touching another. The best time for drawing a meridian line in this manner is about the middle of summer, because the sun changes his declination slowest and his altitude fastest in the longest days."

As a substitute for the transit instrument, Bloxam invented and patented an instrument called a dipleidoscope, which consists simply of three plates of glass, put together at their edges and forming a hollow triangular prism; two of these plates reflect inwards, while the front is plain, and, if placed at noon so that

there is but one image of the sun reflected by the incident rays from these reflectors, it makes a very good meridian instrument, with the advantage of enabling an observation to be taken when the ordinary shadow instrument would not be sufficiently distinct.

In taking observations with these instruments with a view to correct clock time, it is necessary to take into account the difference between mean solar or *true* time and *equal* or clock time; the simplest means of doing which is to consult a good almanac that gives the sidereal time for each noon in the year.

A further correction for longitude would have to be made if Greenwich mean time were required by those who are not in that meridian, by adding or subtracting as described on pages 4 and 5.

6. **Sundials and Clepsydræ.**—The first gnomon or sundial of which we have any historical notice is that of King Ahaz, about 740 B.C. It is mentioned in 2 Kings xx. 11: "And Isaiah the prophet cried unto the Lord: and he brought the shadow ten degrees backward, by which it had gone down in the dial of Ahaz."

The ancients used hemispherical dial-plates, with the radius which throws the shadow running north and south; those now in use are flat, with the edge of the shadow radius forming an angle with the horizon equal to the latitude in which they are situated or parallel to the earth's axis. Although it was possible to tell the time by a mathematically adjusted sundial to within a few minutes, they were in a great measure superseded at a very early date by clepsydræ and sand glasses, though in the face of our want of knowledge of the exact dates of their invention, it is not easy to say which of them was in existence first; it is certain, however, that both were known and in use at a very remote period. They were found even in Britain by Julius Cæsar, who observed by them the difference in the lengths of the days and nights of this country and of those of Italy. They were

introduced, along with other arts and sciences, to Europe from the East, and it is probable that the intercourse between the people of this country and the Phœnicians may account for our thus early possessing them.

Toothed wheels are said to have been first applied to clepsydræ by Ctesibius, a native of Alexandria, about 250 B.C.

Amongst the various descriptions given by ancient writers of the different forms of clepsydræ, I see none of any method for regulating or counteracting the irregular pressure of the water consequent on its running away or through the varying density of the atmosphere. The most usual form seems to have been a graduated vessel containing a float, into which water dropped from another vessel, the float as it rose indicating the time of day.

7. **Sand Glasses, Candle Clocks, and Orreries.**—The sand clocks or glasses seem to have been very similar to an ordinary hour-glass of the present day.

Candle clocks were a later method of marking time. King Alfred the Great is said to have used them, but whether he was the inventor or not is doubtful.

It is rather remarkable that long before the invention of wheel clocks, planetariums or orreries were well known. The first modern planetarium in England was one made for Lord Orrery, whose name has been since generally given to these machines, and that our forefathers looked upon the planetary motions as the true measure of time may be proved by the fact that the first clocks constructed nearly always showed various astronomical phenomena, in addition to showing or striking the hours of the day.

8. **Wheel Clocks.**—Very little is known about the first invention of wheel clocks, no two writers seemingly agreeing as to the exact period of their introduction. Although some historians assign to it such an early date as even the sixth century, it is not very probable that they are correct, the words horologium, horologe, &c.,

having been applied indiscriminately in old writings to any machines for measuring time.

It is pretty certain, however, that clocks driven by weights and striking automatically existed in the eleventh century.

Gerbert, afterwards Pope Sylvester II., is said to have made a clock at Magdeburg in the year 996; but there seems to be a considerable difference of opinion as to whether it was a clock at all, and Dillmar of Merseburg states that it was only a kind of sundial.

The oldest clocks in England were that of St. Paul's Cathedral, London, and one at Westminster, which latter was paid for out of a fine imposed by Edward I., in the year 1288, upon Sir Ralph de Hengham, Chief Justice of the King's Bench, for corrupt practices. It is said to have remained until the time of Queen Elizabeth. The former clock is mentioned in the "Compotus Bracerii" of St. Paul's for the year 1286, where the allowances to the clockmaker, "Bartholomo Orologiario," are mentioned.

9. **De Wyck's Clock.**—From these dates the manufacture of clocks would appear to have become a settled industry in this country, although the first authentic description we have of the interior of any wheel clock is that of one made by Henry de Wyck, a German, for Charles V. of France in 1379, which has been not inaptly styled the "parent of modern timekeepers," since, except that it had no pendulum and only an hour hand, it was very like, in principle, the clocks of the present day. It consisted of a train of wheels driven by a weight, and had a vertical or verge escapement with a vibrating balance, but no spring; the balance instead of being shaped like a fly-wheel was in the form of a T, upon the two thin projecting arms of which concentric notches were cut. Two small regulating weights were suspended from the arms, and it was by shifting these from notch to notch, to or from the centre, that the clock was made to go faster or slower as required.

A description of De Wyck's clock by Berthoud in his "Histoire de la Mesure du Temps par les Horologes," 1802, states the number of teeth in the escape wheel or wheel of rencounter to have been 30, which must be a mistake, as it is impossible for the pallets of a crown wheel or verge escapement to "escape" with an even number of teeth in the wheel.

As this was the general mode of construction adopted in the fourteenth century, the pendulums found in the old church clocks of Exeter, Peterborough, and elsewhere, must have been added long after their original construction. This was the case also with the minute hands later on, when the "works" were utilised; and the dials for showing the time were in many instances added to the original clocks, where these had at first been made to strike only.

Some of the old clocks with only an hour hand are still in existence in this country, as that of St. Margaret's, Westminster; and one of the dials of St. Paul's clock was described in 1844 as being the largest in this country furnished with a minute hand.

As the train of wheels in a watch or clock is driven by a weight falling, or by the uncoiling of a spring, it is necessary that the power should be allowed to expend itself only in equal quantities, otherwise the motion given to the train would be a gradually accelerating one in accordance with the law of gravity.

It is obvious, therefore, that unless some measure were adopted for controlling and regulating the power, the mechanism would speedily run down and exhaust it.

The usual method of regulating the power of the prime mover has always been by controlling the motion of the fastest wheel of the train: this is called the wheel of rencounter or "escape" wheel, because it is allowed to escape from the controlling stops, or pallets, as they are called, only one tooth at a time.

The earliest escapement of which we know anything is that of De Wyck's clock. This was the same in principle

as the vertical escapement of the present day; that is, it had two pallets on a staff or axis at right angles to one another, and which by receiving the impulse alternately from either side of the crown wheel into which they worked, allowed one tooth to "escape" at every vibration of the balance which was attached to their axis; as one tooth "escaped," the opposite pallet received the impulse from the next tooth on the other side of the wheel. The balance had, however, no spiral or balance spring, and so its vibrations must have varied in length (and in the length of time occupied by them, as they could not have been isochronous), according to the strength or weakness of the impulse.

A clock having a similar escapement to the above was exhibited in 1877 at the Special Loan Collection of Scientific Apparatus, South Kensington. It was of Swiss manufacture, and supposed to have been made in the year 1348.

10. **Isochronism of the Pendulum.**—The discovery of the isochronism of the pendulum is attributed to Galileo, who observed that a chandelier swinging in a church at Florence performed the vibrations of the long and short arcs in the same time. It was he who first conceived the idea of applying the pendulum to a clock. This clock his son Vincenzo made in 1649, but, according to the account given of it by Galileo's disciple Viviani to Prince Leopoldo de' Medici, it was not by any means perfect, and it was while engaged in perfecting it that Vincenzo died, on the 16th of May, 1649.

Huygens, the Dutch philosopher, was the first to investigate thoroughly the mathematical theory of the pendulum. He also, along with Dr. Hooke and others, claimed the credit of the original discovery, although, apart from its application and from Huygens' investigations, there does not appear to be much merit in its mere discovery. Sir Edmund Beckett, referring to the discovery of Galileo, says, "When we consider the vast

number of pendulums of various kinds swinging about the world, it certainly is difficult to imagine that nobody ever made that observation before the sixteenth century."

Huygens discovered and established the fact that the oscillations of a pendulum, in order to be isochronous, should describe a cycloidal curve—*i.e.*, a curve traced by a point in the circumference of a circle rolling upon a straight line. And in order to compel the pendulum bob to travel in this curve, he invented the cycloidal cheeks between which the spring was suspended. Although this was thought to be a very great improvement at the time, the idea was soon given up, it being found that clocks constructed without the cheeks went better than those constructed with them. The theory would be true enough of what is called a simple pendulum—*i.e.*, a mathematically perfect pendulum in which there is no weight but at the centre of oscillation—but as in practice there is no such thing, it is found that any advantages which a pendulum so suspended may theoretically possess over an ordinary one, are more than counterbalanced by drawbacks in the shape of friction against the cheeks, etc.

But, as to perform isochronous vibrations a pendulum ought not to deviate from its true theoretical path (which is a cycloidal arc), so any variation of the arc actually described by an ordinary pendulum (which is a segment of a circle) alters its time of oscillation.

This error, which is called the *circular error* (being the difference between the time occupied by a pendulum oscillating in a cycloidal and in a circular arc), is best overcome, or rather prevented to a great extent, by using a long pendulum describing small equal arcs; and, in order that the arcs described should be kept equal, the impulse must be equal too. This equality of impulse has been best secured by the adoption in modern clocks of what are called "dead beat" escapements, and, in the case of exposed clocks, of the "gravity" escape-

ment, a description of which will be found in its proper place.

As the invariable length of the pendulum is such an important factor in the performance of the clock, it was natural that its *compensation* for varying temperatures should have been one of the first great problems early horologists had to solve; in fact it is a subject which has occupied the minds of clockmakers even to the present day.

The **principle of Compensation** adopted has nearly always been the construction of the pendulum with two or more metals of different expansibility, so arranged that the position of the centre of oscillation shall remain approximately unaltered.

The most successful inventions have been, for regulators and house clocks, the mercurial and gridiron pendulums, and for large turret clocks, the zinc and iron compensation which, while being as effective as the mercurial, is a good deal cheaper.

11. The **English Clock Trade**, with the exception of the trade in turret clocks, has never reached to any degree of importance, and could never at any time have been classed with our large national industries; while of late years the trade in house clocks may be said to have almost entirely left us. The French have taken what may be called the drawing-room clock trade out of our hands, the proverbially elegant taste of that nation, aided by a better artistic education and a more energetic and intelligent application of it amongst those interested in the manufacture, having enabled makers to produce clocks which in quality and price have entirely superseded the same class of English goods. English makers, having unfortunately used no efforts to supply obvious public requirements either in the way of cheapness or elegance, suddenly awoke to the fact that their trade was gone; so that with the exception of turret clocks, and of first-rate regulators and quarter clocks, there are now only a few eight-day

kitchen and school clocks made in England, and even the first of these industries is hard pressed by the cheaper importations from Holland, Belgium, Germany, and America. The quarter clock, striking, and generally repeating the hours and quarters, is a distinctly English production, and has never been rivalled by any foreign-made clock in its own peculiar province, that of a hall clock. Even in these days of low prices and keen competition, it has generally maintained its position, quality, and even price, which it commands now as much as it did fifty years ago. It is made mostly in London by the best clockmakers, and its handsome case and sonorous gongs render it a pleasing characteristic of an English hall. It is made sometimes to chime on gongs and sometimes on bells, and often on both, when they can be alternated at pleasure by setting a hand which is on the dial for this purpose; it can also be rendered silent by moving a pin fixed at the side of the dial. Of late years a large number of imitation quarter and other old English clocks have been imported from France, and sold as English-made clocks, and the public has doubtless largely suffered by the deception. The imitation article, however, can easily be detected in the case of large clocks by noticing the distance from one another of the winding squares, or of the holes in the dial. In an English clock, in which the size of the movement corresponds to that of the case, these winding squares are some distance apart, but in the foreign imitation they are almost always close together, the size of the movement bearing but small proportion to the large and showy exterior. The clocks imitated are usually the quarter clocks and the early English clocks, with porcelain dials and antique figuring.

Regulators or astronomical clocks are still made here, and also exported on a small scale, and, save some cheaper attempts at the same thing imported from Austria and Germany, have no foreign rival. And it is probable they will hold their own with the quarter

clocks, since there is not sufficient demand for them to make their wholesale manufacture pay.

The turret clock trade is carried on necessarily on the factory system, and, like most large English mechanical work, is not likely soon to be beaten by that of any other country.

12. **The Westminster Clock.**—The construction of the great Westminster clock by the eminent scientist and horologist, Sir Edmund Beckett, caused a revolution in this branch of the clock trade. The design upon which it was made, which was somewhat unfavourably criticised at first and compared by some of the old school of clockmakers to a mangle, is now accepted as a model after which all the best turret clocks are fashioned with such modifications as their respective collocations render expedient. It was made by Mr. Dent, from plans supplied by Sir E. Beckett, then Mr. Denison, in 1854, and was fixed in the tower in 1859, since which time it has, by its performance, given universal satisfaction and effectually silenced all adverse criticism, its variation, as certified by the then Astronomer Royal, Sir G. Airy, in 1872, averaging one second per week.

The French have a few turret clock factories, and have turned out some very elaborate and some very good clocks, but they are considerably dearer than ours.

The only other class of clocks now made in this country are the eight-day dials. These clocks, made in various sizes, are used for offices, kitchens, schools, halls, &c., and are good serviceable clocks, where not much ornament is required; they are made both with and without striking parts, and have the great advantage over all foreign spring clocks of having the adjustment of the fusee, which, in all spring clocks with short pendulums, is essential to compensate for the varying force of the spring, and without which it is impossible to get anything like good time from them.

Nearly the whole of the rest of the market is in the hands of the French and Americans; the French com-

manding it for the marble, gilt, and carriage clocks, while the Americans have nearly their own way with the cheapest kitchen and small bed-room timepieces and alarums, which have almost entirely displaced the German and Dutch ones.

Since the development of electricity as a motor it has from time to time been applied to clocks, but hitherto with no very successful or practical results, though its further development may possibly lead to a system of controlled clocks, of which we, and London especially, are greatly in need.

The introduction of a recognised public standard of time, either by controlled clocks or by hourly time signals, would be a great boon both to the public and to the makers of high-class watches. It is a want which has long been felt, and which watchmakers have long desired to have supplied.

CHAPTER II.

WATCHES AND CHRONOMETERS.

13. **The Earliest Watches.**—The first watches were made at Nuremberg, about the year 1500, where the mainspring is said to have been invented by Peter Hele, a clockmaker of that town; they were furnished with the verge escapement, similar to the one in De Wyck's clock, the want of control over which no doubt suggested the idea of the fusee adjustment, which was invented about the year 1520. Charles V. of Germany is said to have taken great interest in the performance of these early specimens of horological art, and to have kept several of them going together. They appear to have been in common use in England in the reign of Queen Elizabeth, and are mentioned by Shakspere in "Twelfth Night." But it was not until the invention of the balance

spring, about the year 1660, that any rapid progress was made in the direction of good timekeeping.

14. **Hooke's Law.**—The invention of the balance spring is assigned both to Huygens and to Dr. Robert Hooke; but, notwithstanding the genius of the Dutch clockmaker and philosopher, the merit of its application must rest with Hooke, whose enunciation of the theory of its isochronism in the words 'Ut tensio sic vis"—"As the tension so is the force"—showed that he was well acquainted with its properties, although this axiom, which is called "Hooke's law," is true only of certain lengths of spring fixed at the ends at certain positions. This will be considered more fully in the chapter on the Balance Spring.

15. **The Clockmakers' Company.**—The Clockmakers' Company of London was incorporated under a charter granted by Charles I., on the 22nd of August, 1631; and David Ramsay, clockmaker to the king, was elected the first master; but they did not get their livery until 1767. They had the power of regulating the watch and clock trade in, and for ten miles round, London, and the right of entry into vessels, shops, and warehouses for that purpose. They were a very active and representative body, as their records will show — entries being not uncommon which state the fact of "bad" or "deceitful" watches, etc., being broken up—until the present century, when, Free Trade obtaining, they relapsed into that state into which bodies, corporate or otherwise, generally fall that have nothing to do. However, since the formation of the City and Guilds of London Institute for the Advancement of Technical Education, most of the Companies have seen the desirability of identifying themselves with the trades from which they take their names, and the Clockmakers' Company now offer the freedom of the Company and a prize of £10 to the most successful competitor at the annual Greenwich trials, and a prize of £5 to the second, subject to certain conditions; they also grant £10 per

annum to the Horological Institute for the purpose of educating watchmakers. But since any one who can buy a chronometer (that may happen to be first) and have it in his possession for a certain length of time, can obtain this honour and reward without being able to make any part of the instrument, this action of the Company is hardly sufficient to promote technical education or otherwise to materially assist the trade. Unfortunately they have not a hall of their own, and some years since they handed over the valuable technical library and objects of trade interest they possessed to the custodians of the Guildhall Library and Museum, an institution which, though of the utmost utility to the general public, is almost inaccessible to the great majority of watch and clock makers.

16. **Repeating work** was invented in the year 1676, by a clergyman named Barlow. He got Thomas Tompion, the celebrated watchmaker of that period, who had assisted Dr. Hooke in his researches, to make a watch for him, with his repeating mechanism attached, and applied for a patent for it; but he was opposed in his application by Daniel Quare, a watchmaker, who, some years later (in 1691), introduced the minute hand, and who had been devising something in the same direction. The matter was referred to the king (James II.), who, upon trying the pieces submitted to him for his decision, gave his judgment in favour of Quare. This striking work was subsequently much improved upon by Julien Le Roy, of Paris, who introduced a piece which prevented the repeating part from striking until the rack was driven home to the snail or stop, and consequently insured its striking the hour correctly. The English repeaters were made to strike on a bell screwed into the back of the case and surrounding the movement, and it is to the Swiss, later on, that we owe the substitution of springs upon which the hammers strike.

Although the repeating watch was an English invention, and the motion work made by Stogden was a further

improvement of it, the making of the repeating motion, or striking parts, of watches has been entirely abandoned in this country; the branch is a long one, the work is entirely done by hand, and is not very remunerative, and there is not a sufficient number of repeaters made to employ many hands, so that the Swiss have it all to themselves, and English watchmakers are obliged of necessity to obtain this part of the watch from Switzerland, though the best repeaters are made up here.

17. **Jewelling, and the Horizontal Escapement.**—From the latter part of the seventeenth century, the science of horology steadily improved in this country. Facio introduced jewelling from Geneva in the year 1700; and George Graham, an apprentice of Tompion, invented the cylinder escapement in the same year. This escapement, although found to be a great advance on the verge, was soon almost discarded, owing to the rapidity with which the brass escape wheel cut the cylinder, which was of steel. This indeed caused the introduction of ruby cylinders (some of which, made by Mudge and his contemporaries, are still the admiration of our present experts, and proofs of the manipulative skill and patience of our early horologists), but the difficulty and expense of making rendered them unsuitable for ordinary watches. The Swiss, however, took the idea up, and the horizontal escapement with a small steel escape wheel was, until very recently, almost the only one applied to their watches; it is indeed generally made now, but the superior qualities of the lever are slowly asserting themselves in that country, and are gradually driving it out of the market.

18. **Harrison's Marine Timekeeper.**—The want of a means of discovering the longitude at sea with any degree of certainty having long been felt amongst maritime nations, and by England especially, which was at that period rapidly developing her commercial activity, an Act of Parliament was passed in the year 1714, the twelfth year of the reign of Queen Anne, con-

stituting certain persons commissioners for the discovery of the longitude at sea (called afterwards the Board of Longitude), and offering the very large sum of £20,000 for the best means of attaining this object. This Board evidently thought a good timekeeper what was needed, and offered sums of respectively £10,000, £15,000, and £20,000 for one that would determine longitude to within sixty, forty, or thirty miles. There is no authentic record of any horologist attempting to solve this problem, and gain any of these rewards, until the year 1728, fourteen years after they were offered, when John Harrison appeared in London, and submitted plans and drawings of a marine timekeeper to Dr. Halley, then Astronomer Royal. The Doctor recommended him to George Graham, who saw the merit of his plans, but, being a practical man, advised him to go home again and make his machine before applying to the Board for any assistance.

John Harrison was the son of a carpenter, and was born at Faulby, near Pontefract, Yorkshire, in the year 1693. His father had brought him up to his own business, but he was early devoted to mechanical pursuits, and had spent much of his time in repairing clocks and watches. He had experimented on pendulums, and had invented the gridiron compensation, this invention giving him a position in the eyes of Graham, who was himself occupied on the same subject; and his experiments on the effects of temperature on various metals no doubt suggested to him the application of the principle of compensation to watches, in order to counterbalance the variations in rate caused by the expansion and contraction of the balance-spring in heat and cold.

Harrison's compensation was effected by a laminated piece fixed to the plate at one end, and carrying curb pins, between which the spring acted, at the other; and it was by the movement of these pins to or from the stud into which the spring was pinned, lengthening or shortening the acting portion of the spring, that the watch was regulated, this curb acting in the same manner

as a watch is regulated by hand. But notwithstanding Harrison's use of the brass and steel pieces pinned together, his suggestion that the compensation should be effected by the balance, and his acquaintance with Graham and other famous English watchmakers, the honour of constructing the first compensation balance is acknowledged to belong to Julien Le Roy, the famous French watchmaker, who also invented a mercurial compensation balance.

Le Roy's balance was made in the same manner as Harrison's "thermometer kerbe," as he called it, namely, by pinning the laminæ of brass and steel, composing the circumference, together. The first Arnold's balances were also pinned in this manner, and Reid speaks of them as performing better than those that were afterwards made solid, when Thomas Earnshaw had made an improvement, amounting to an invention, by forming the rim out of a solid piece by melting or fusing the brass on to the steel.

The escapement of Harrison's timepiece was a sort of remontoir, very complicated and very beautiful, as may be seen in the fourth chronometer of his construction, now in the Royal Observatory, Greenwich, a full description of which is given in Vol. I. of the *Horological Journal.* In the year 1735 he again came to London, having in the seven years' interval constructed his timekeeper; and it seems curious that, although nearly a hundred years had elapsed since the first application of the spiral spring by Hooke, there is no record of any attempt having been made to counteract its irregularities consequent upon variations of temperature (and which rendered timekeepers of comparatively little use for astronomical and other scientific purposes) until this time.

Harrison, having satisfied himself of the satisfactory performance of his timepiece by trials on board a barge on the Humber, obtained permission in the following year to proceed to Lisbon in one of the king's ships. In

this voyage he was able to correct the reckoning to within 1° 30′, and the Board of Longitude granted him £500 to still further improve his timekeeper.

After constructing other chronometers with various improvements, he was enabled to ascertain the longitude at sea to within ten miles, one-third of the distance required by the Act of 1714; but it was not till the year 1757, after much trouble and many remonstrances with the Commissioners, that he obtained the last portion of the £20,000 offered by Parliament, only nine years before his death, which took place at his house in Red Lion Square. He was buried in Hampstead churchyard, and his tomb, which had fallen into decay, was restored a short time ago by the Clockmakers' Company.

Harrison must have been a man of extraordinary genius and perseverance, having had so many disappointments to encounter. He invented the maintaining power which rendered practicable the use of the fusee in spring clocks and watches, without which marine chronometers could never have been brought to their present perfection. It is the most perfect adjustment of the unequal pull of the mainspring, and has been the great and distinctive feature of the English watch up to the present time.

The third chronometer of his make, together with a facsimile of it by his apprentice, Mr. Kendall, is also preserved at Greenwich Observatory. It is in a very large double silver case, shaped like an old-fashioned watch, and is of very beautiful workmanship.

19. **Mudge's Chronometer.**—After Harrison had received the last portion of the reward, another Act of Parliament was passed, limiting any further reward to £10,000, and also prescribing a much closer rate of going for timekeepers, it being taken for granted that as the attention of so many eminent men had now been directed to this important subject, a better instrument than Harrison's would soon be produced. The Astronomer Royal, Dr. Maskelyne, being now appointed

to test the instruments, Thomas Mudge (a watchmaker who had long been preparing a timekeeper to compete with those of Harrison) submitted one for trial, which, after a twelve months' test, although it did not come within the limits prescribed by the Act, was reported so favourably of that the Board of Longitude granted him £500. Mudge made other and improved chronometers, he, too, having trouble with the Commissioners. But after an inquiry into the merits of his inventions, and in opposition to the Board of Longitude, the House of Commons made him a further grant of £2,500. He, in 1750, invented the lever escapement, which is, with some modifications, the same in principle as that now in use, and is acknowledged to be the best for pocket watches at the present day; but, owing possibly to the difficulty of getting it well made, or to its wrong proportions, its manufacture was abandoned in favour of the verge and horizontal escapements, and even of the rack lever, an inferior escapement on a similar principle, patented by Peter Litherland, a Liverpool manufacturer, in 1794; and it was not until George Savage improved and altered it that the true value of the lever escapement was appreciated.

20. **Arnold's Escapement.**—John Arnold had, at the same time as Mudge, a chronometer under trial at Greenwich, which was reported to perform better than Mudge's, and although Arnold's chronometer was not undergoing the trials with a view to a Government reward (as neither he nor his son ever placed a chronometer there with that idea), his instrument attracted the attention of the committee whose business it was to inquire into the merits of these timekeepers and the principle of their construction, the result being that, from the very favourable report of it, Mr. Arnold received at different times a sum of £1,322 from the Board of Longitude, and his son, in 1805, received the remaining portion of a grant of £3,000, an amount equal to that granted to Mudge.

Arnold, in 1782, patented the detached or "chrono-

meter" escapement and the compensation balance, and although both these inventions are claimed by the French for Julien Le Roy, Le Roy's idea (at all events of the escapement) must have been very crude, and could scarcely have amounted to much more than a suggestion. But as the French Government had also at this time offered large rewards for a perfect timekeeper, it is very difficult to say how much of any invention belonged to the person credited with it. However, the escapement patented by Arnold in 1782 was a long way in advance of anything that had preceded it, and was the parent, with but little modification in principle, of the chronometer of to-day. As has been mentioned, Harrison had advised the compensation of the spring to be effected by the balance, instead of by an application to the spring itself, and Julien Le Roy had succeeded in making a compensation balance. Arnold's balance, which was a modification of Le Roy's, was made to compensate by affixing two laminated arms pinned together to the outside of a circular solid rim; he afterwards made the rim itself of these laminæ.

21. **The Cylindrical Spring.**—To Arnold also is due the credit of the invention of the helical, or cylindrical, spring, the "incurvating the ends" of which, he says, "is attended with the property of rendering all the vibrations of equal duration, because the figure is always similar to itself." There is no doubt that Dr. Hooke when he applied the spiral spring to the balance of a timekeeper perfectly understood its isochronous properties, and his law of tension might have pointed it out to others; but, notwithstanding Harrison's undoubted genius, he could not have understood it, as he got his long and short arcs of vibration equal by the very objectionable method of weighting the balance more in one place than another, and, in explanation, he says "that the natural tendency of the vibration is to go slower in the short arcs." Arnold evidently knew better than this, and his detached escapement must soon have taught him

the great importance of the isochronous properties of the spring, which, with its cylindrical form and curved ends, remains just as he left it; therefore, although Harrison is justly remembered as the "father of English chronometer makers," the principles of Arnold's timekeepers have been the most useful and permanent.

22. **Earnshaw's Balance.**—A name always associated with Arnold is that of his contemporary and rival, Thomas Earnshaw, who followed up his improvements. In the first place Earnshaw improved the balance by melting the brass on to a disc of steel in such a way that it could be turned down in the lathe to the proper proportions, and then become a solid piece of metal, or metals, instead of two pieces pinned together, or soldered together, as was sometimes done; and this balance of Earnshaw's is now applied to nineteen out of every twenty marine chronometers without any alteration whatever.*

But the improvements made by Earnshaw on Arnold's escapement were of even more importance than his improvement of the balance. He was the last of what may be termed the chronometer makers of the eighteenth century, and his chronometer left so little room for improvements that no further considerable sums have been offered by Government to induce the makers to devote their time to that object. The annual trials of chronometers at the Royal Observatory, Greenwich, have been continued, and the Government purchase a few of the best of them, but, from being extremely liberal, they have become extremely economical, and pay such prices for those they do purchase as would not repay any workman for the extra time and trouble necessary to be devoted to their preparation for such severe trials as they are subjected to, with the prospect of selling at very

* Reid in his *Treatise on Clock and Watch Making* speaks of the balances made of separate laminæ pinned together as performing better than those made after Earnshaw's method. It is, however, not easy to see how this could be, and it must have been exceedingly difficult to have made one of these balances anything like true.

little more than the market price of the article. But, then, the title of "Chronometer Maker to the Admiralty" is worth money to many men who are not chronometer makers, while it is worth nothing to many who are, and who, therefore, refrain from troubling themselves to invent means of overcoming the effects of the absurd ranges of temperature through which the instruments are now tried, ranges through which it is utterly impossible they could be exposed in actual use.

23. **Auxiliary Compensation.**—As the ordinary compensation balance has an inherent failing in its action, and only approximates to the action of the spring through a limited range of temperatures, or, if adjusted for extremes, fails in the mean temperatures, it was found necessary, in order to counteract this error (which is generally known by the somewhat misleading name of "middle temperature error"), to devise a secondary, or auxiliary compensation, as it is called, and to this end most of the efforts of chronometer makers have for many years been directed.

The discovery of this error marks an epoch in the history of chronometer making; and the necessity of correcting it by means of an auxiliary compensation, mainly owing to the great range through which chronometers are tried at Greenwich—a range which sometimes extends over more than 100° F.—has brought out the inventive faculties of chronometer makers and others in a truly astonishing manner. The late Mr. Charles Frodsham, speaking of horological inventions, said that "if every inventor would record his failures it would be a boon to those who might be inclined to follow in his footsteps," but most of the so-called improvements are so hopelessly foolish that I will only enumerate a few of the balances that have been constructed on somewhat sound principles by some of our best men down to the present time. Professor Hartnup of the Liverpool Observatory (who, from his great experience of chronometers and their rates, may be considered one of our highest

authorities on the subject), in laying down the principles of their construction, has given the following rule:—"The balance-rim must be of a circular form, so that the laminæ of brass and steel may be turned down to the requisite proportions with facility, and the compensation and poising easily effected," and, I will add, surely maintained, as no timekeeper can perform accurately for any length of time if the balance is of such a form as to get out of shape, and consequently out of poise, by any variation of temperature, or by the rough treatment chronometers are almost sure to be subjected to on board ship. Chronometer balances are often found to have taken what is called a "set" after having been some time at sea (the rim having become distorted), and the chronometers frequently in consequence have changed their rates. This must be owing to their being exposed to either greater heat or greater cold than was the case when their adjustment was effected. But, if the balance be well made and true, and the laminæ of equal thickness throughout, the limbs will assume the same form, and it will seldom be found much out of poise, and should the compensation not be altered by this alteration of the circle of the balance, it is unwise to interfere with it further than to see that the poise is not affected.

The successful employment of the simple and serviceable form of balance bequeathed to us by Earnshaw, which is adopted in nearly all ships' chronometers, is mainly owing to its near approach to the conditions laid down by Professor Hartnup. Numerous other contrivances (invented to overcome the error of the balance), some of them of the most grotesque and unseemly shapes, are mostly to be found in horological museums, or in the lumber drawers of chronometer springers, who have had to remove them when they were found not to answer. Many of these have been taken from chronometers which gave good results in the Greenwich trials, but were discovered to be quite useless for the every-day work on board ship.

24. **Improved Chronometer Balances.** — The first record we have of any attempt being made to overcome the "middle temperature error" is that of a chronometer maker named Hardy, who in 1804 received a prize of £30 from the Society of Arts for an improved chronometer balance (see p. 244). Hardy rejected the old circular form, and adopted that shown in Fig. 47. There appears to be no record of its performance, but it was the forerunner of others of the same form, or a modification of it; the original Mr. Dent evidently took the idea of his balance from it, and improved upon it (see p. 247). Other chronometer makers were not idle during the years following Hardy's invention. Molineux patented a balance with an auxiliary compensation, which the late Mr. Eiffe claimed as his invention, and over which a good deal of discussion and bitterness resulted. Some few months before his death Mr. Eiffe wrote me a letter in reference to something I had said at the Horological Institute respecting this balance, in which he said his claim to its invention had been acknowledged by the Admiralty, who had given him the sum of £300, on the recommendation of the Astronomer Royal, in consideration of its merits. Chronometers of both Eiffe's and Molineux's construction with this improvement were tested at Greenwich, and were reported to have given good results; but the balance in its then form has never, for various reasons, come into use.

Loseby, a celebrated chronometer maker, about the same time patented a modification of the mercurial compensation invented by Julien Le Roy, and with his skilful manipulation this balance gave wonderfully good results for a series of years at the Greenwich trials. He applied several times for a reward, sending in a list of the rates of going of his and other chronometers, by which he endeavoured to prove that his were the most successful in trials extending over a period of five years. This produced a denial from the first Mr. Dent, who claimed the superiority for his own chronometers, and

the discussion was afterwards continued by Sir Edmund Beckett, who, with his usual acumen, had considerably the best of the controversy. Loseby, disappointed at not getting a reward from Government, withdrew altogether from the trials.

Poole's application to the ordinary balance may in point of time next be noticed. It is of the simplest construction, and, perhaps in consequence, may be reckoned among the most successful. It has many times enabled chronometers fitted with it to take high places at Greenwich, and has probably been more generally adopted in commercial chronometers than any other form of auxiliary adjustment, if it can be called by that name, as its only action is to oppose a slight resistance to the rim of the balance when moving outwards in cold (see p. 250).

25. **Hartnup's Balance.**—In the many opportunities he has had of testing the chronometers sent for trial at the Liverpool Observatory, Professor Hartnup has had ample scope for thoroughly investigating the so-called middle temperature error, and the necessities for, and requirements of, an auxiliary compensation ; and he has invented a balance which, while securing the continuity of action of those of Hardy and Dent, kept within the conditions laid down by himself and already referred to.

Mr. Kullberg modified Hartnup's balance, and produced what is known as Kullberg's flat-rimmed balance (see p. 253). Chronometers with this balance have stood first at Greenwich on several occasions, but it has not been adopted by the trade, partly on account of the difficulty of making and adjusting it, but principally owing to its want of rigidity and strength to withstand rough usage.

26. **Mercer's Balance.**—Another compensation that has given the best result and is about the best auxiliary I have seen or tried is a modification of the invention of Molineux, or Eiffe (or both as it may possibly have been), due to Mr. Mercer (see p. 256), who, with this balance, has won many Admiralty prizes both for himself and others. I have called it a modification, because

the principle of action is the same as in Molineux's, but it is more of an invention than many alterations that are called inventions. There is no difficulty in making it, there should be little or no difficulty in applying it to any ordinary balance, it is easily adjusted, and is very little more liable to disarrangement than the ordinary balance. The auxiliary pieces are fixed to the arms of the balance with a steady pin and two screws, and the soles or platform which support them are perfectly solid and allow them to act with as much regularity and precision as the limbs of the balance itself. As the error of the balance increases in an increasing ratio with increments of temperature, this auxiliary acts only at high temperatures, from whatever point may be determined upon in adjusting it, the adjustment being regulated by two screws fixed in the rim of the balance coming into contact with the laminated arms of the auxiliary and stopping their action at any fixed point.

As the regulating power of the balance is dependent on the distance of the moment of inertia from the centre, and as this is proportional to the square of the radius of the mass from that centre, it follows that the farther out the timing nuts of a balance are drawn, the greater will be the error of the balance through their expansion and contraction from and to the centre, not only from the variation in the length of the balance arm, but from their own variation and that of the small screws which carry them.

This error is of so much importance that it should not be lost sight of, and in no case should these weights or screws be drawn outwards beyond the circumference of the compensation weights; and if, when the adjustment of the chronometer is complete, it is found necessary to draw them out, the two smaller screws at the side of them, which are usually added, should be replaced by heavier ones, and the weights screwed home to within one turn or thereabouts; indeed it would be a further improvement if they were placed inside the rim, as then any expansion

that might take place in them or their screws would be carrying them towards the centre instead of away from it, and would assist in diminishing the error against which all these complications are directed.

The adjustment of marine chronometers is now effected by means of two weights sliding on the rim of the balance. Formerly screws, such as are still necessarily used for this purpose in pocket watches, were sometimes used; but it has been found that, where there is room, weights are preferable, as the laminæ composing the rim are kept solid, drilling and tapping holes all round it being certainly a great evil. Some of the old pocket chronometers have adjusting weights on the balances, but there is no room in watches of modern size and shape for them.

27. **Compensated Watches.**—No good watch is now made without a compensation balance, but there are also many bad ones made with them, and it has lately become the custom to put what are called compensation balances to the very worst of the foreign watches sold in this country; these balances being infinitely worse than brass or steel ones, especially if they are cut open, as the material of which they are composed is so soft that the least touch puts them out of shape, and consequently out of poise, so essential to the going of even the worst of watches.

Cheap watches with compensation balances should be discouraged by both the sellers and wearers of them, and instead of a compensation balance in such a watch being a recommendation it should be considered as indicating a sham, which it generally is.

Nine-tenths of the English watches that have compensation balances have never been adjusted, and although a watch with a well-made compensation balance will generally give better results than one with a solid metal one, there is no rule by which it can be made approximately near, and it is only by the usual testing in the oven and in cold that the performance of any balance can be tested; but as the principal extra cost of compensated watches is not in the balance but in the somewhat

tedious and sometimes troublesome process of adjusting it, this last operation is omitted, and the public (not five per cent. of whom know anything of the matter) buy them and find out their errors afterwards. Even if the manufacturer is honest enough (and he usually is) to tell the truth in the matter, the practice of making these watches is a bad one, as may easily be seen if the fact I have just stated—and I think I have overstated the proportion of adjusted watches made—be compared with the advertisements everywhere to be found of watches "perfectly compensated and adjusted for all temperatures," to be had at very moderate prices.

As the development of the compensation has been identical with the development of watches and chronometers, it has been necessary for me to trace it from the earliest efforts down to the present day.

28. **Ships' Chronometers.**—If the spring of a watch or chronometer be perfectly isochronous, the balance should perform the vibrations in the same time, irrespective of the number of degrees passed through, but as, in practice, there is no such thing as perfect isochronism (although watch-springers, by dint of very careful manipulation, may make their timekeepers approximate very nearly to that state), ships' chronometers are now always hung suspended in gimbals, in order that by thus maintaining the balance pivots in a vertical position, the side friction on them (which is much greater than the end friction and would consequently greatly diminish the arc) may be avoided and the arc kept more constant. Of course this is only a help towards good timekeeping, as the thickening of the oil, which is sure to take place after the chronometer has been going for any length of time, will have the effect of shortening it.

To still further promote the good performance of the chronometer, the box in which it is suspended is placed within a thickly-padded outer case, which maintains it at a more uniform temperature.

29. **English Watches.**—The head-quarters of the

English watch and chronometer trade is Clerkenwell, the remainder of the watches (mostly of the commoner kind) being chiefly made in Liverpool, Coventry, and Birmingham. Since the demand for cheaper watches on a large scale, consequent on the large number of foreign importations, watch factories have been established at the two latter towns.

But hitherto the attention of English watchmakers has been directed to the improvement in the quality of watches, rather than to their cheapness of production, and it is greatly to be questioned whether the introduction of the factory system, and the wholesale adoption of machinery in the manufacture, would at all benefit the trade in this country. English watches have always commanded their price in the markets of the world, and the good name they have ever borne has led to their imitation by foreign producers, both by the forgery of English makers' names and of the English hall-marks in the cases, and by sending unfinished cases here and getting them marked at the Goldsmiths' and the provincial halls through the agency of case-makers and others. This hall-marking, though in itself no trade mark, but merely a guarantee of the quality of the metal, is found useful by foreign makers in helping them to pass off their watches as of English make. This is proof, if any were required, of the high value set upon English-made watches, and of the estimation in which they are held by foreigners. And what would become of this esteem if, instead of continuing to maintain our high position, we were to compete with the slop trade of Switzerland or America? There are many people who will tell us that some wretched thing in the form of a watch "goes well enough for them," but is such an argument a sufficient reason for lowering our standard of excellence? No! If we are to make a more marketable article in the way of watches let us proceed in the right direction, by organising our system of manufacture, by altering and improving the plan of our movement (not by the elimination of the fusee, but by, amongst other things, the total

abolition of the full plate in favour of three-quarter- and half-plate movements), and by imparting more intelligence and education among our workmen.

The want of technical education has kept the trade back more than anything else. Under the old apprenticeship system, the pupil was usually kept running errands and making himself generally useful for the first year, or perhaps more, after which he was promoted to the bench, when, after learning perhaps to make pivots, a little filing, &c., he was very often left to his own resources to pick up whatever he could.—(An amusing anecdote was once told me by a workman of his early training as an apprentice. The process of his instruction being that if the piece of work was satisfactory which he had completed, well and good; nothing was said; but if not he was incontinently "knocked off the stool" by his gentle master, but the work, nevertheless, "went into the box.") It was with the empirical knowledge thus obtained that most of the past generation of finishers and others were formed into workmen, and it is not astonishing that the watch-manufacture of the country has not taken a higher rank amongst the sciences, when it is considered in whose hands it has hitherto been left; indeed, the surprise should be at the progress made by men who have all along been working by what may be termed the rule of thumb.

30. **Apprentices and Pupils.**—The apprenticeship system, with its seven long years of probation, although it still has its advocates, may be considered to all intents and purposes dead; and perhaps it is as well that it is so. It is not at all suitable to modern ideas or tastes, and, even its present advocates, who are mostly men who have themselves endured it, whilst praising it in one breath, condemn it in the other, by citing their own experiences. Its place will no doubt be taken by schools of instruction, such as that of the Horological Institute, where, it is safe to assert, a pupil who is at all diligent

ment, a description of which will be found in its proper place.

As the invariable length of the pendulum is such an important factor in the performance of the clock, it was natural that its *compensation* for varying temperatures should have been one of the first great problems early horologists had to solve; in fact it is a subject which has occupied the minds of clockmakers even to the present day.

The **principle of Compensation** adopted has nearly always been the construction of the pendulum with two or more metals of different expansibility, so arranged that the position of the centre of oscillation shall remain approximately unaltered.

The most successful inventions have been, for regulators and house clocks, the mercurial and gridiron pendulums, and for large turret clocks, the zinc and iron compensation which, while being as effective as the mercurial, is a good deal cheaper.

11. The **English Clock Trade**, with the exception of the trade in turret clocks, has never reached to any degree of importance, and could never at any time have been classed with our large national industries; while of late years the trade in house clocks may be said to have almost entirely left us. The French have taken what may be called the drawing-room clock trade out of our hands, the proverbially elegant taste of that nation, aided by a better artistic education and a more energetic and intelligent application of it amongst those interested in the manufacture, having enabled makers to produce clocks which in quality and price have entirely superseded the same class of English goods. English makers, having unfortunately used no efforts to supply obvious public requirements either in the way of cheapness or elegance, suddenly awoke to the fact that their trade was gone; so that with the exception of turret clocks, and of first-rate regulators and quarter clocks, there are now only a few eight-day

kitchen and [illegible]
the first of these [illegible]
cheaper importation [illegible]
and [illegible] The [illegible]
rally [illegible]
English [illegible]
foreign-made [illegible]
of a [illegible]
keen [illegible]
tion [illegible]
as much [illegible]
in London [illegible]
case and [illegible]
tic of an [illegible]
on [illegible]
they [illegible]
which [illegible]
rendered [illegible]
the dial [illegible]
quarter and [illegible]
from France [illegible]
public has [illegible]
The imitation [illegible]
the case of [illegible]
one another of [illegible]
the dial. In an [illegible]
movement [illegible]
squares are some [illegible]
tation they are [illegible]
of the movement [illegible]
large and showy [illegible]
usually the quarter [illegible]
with porcelain dials and [illegible]

Regulators or astronomical [illegible]
and also exported on a [illegible]
cheaper attempts at the [illegible]
Austria and Germany, have [illegible]
is probable they will hold their [illegible]

will learn more in three years than he would ever have learned under the old system, and be almost as good a workman as he would have been in twice as long a time under an apprentice master. At this institution the theoretical instruction is combined with the practical in such a way that a pupil not only learns to work, but learns to work with a definite object in view.

31. **Machine-made Movements.**—Watch and chronometer movement making (with the exception of those made in the factories referred to) is now confined to Lancashire, where the parts, comprising the frame, fusee, barrel, and the wheels and pinions, are by the judicious subdivision of cheap labour, turned out at an astonishingly low price. The want was very much felt until quite recently of any recognised standard of sizes in the movements; every movement maker working to gauges of his own, and no two watchmakers having like ideas on the subject.

Mr. Wycherley, of Prescot, was the first to remedy this evil, by the introduction, in 1866, of machine-made movements with eight standards of sizes. He erected a factory and expended a great deal of money in very elaborate and costly machinery, encountering a good deal of opposition, not unaccompanied by threats, from many of the working men of the district; he succeeded, however, in making interchangeable movements at a very cheap price, and his sizes have been generally adopted by the trade: but he had to get rid of some of the very complicated machines erected at first, and to replace them with a greater number of simpler ones, which were found to be more suitable for the work. Mr. Hewitt, his successor, is following his lead in the same direction and has succeeded in producing movements with the keyless work attached, which compare favourably in price with Swiss productions, and are superior in quality. The keyless mechanism, which many imagine to be a recent invention, was applied to some of the watches made by Arnold, although it was a fixture on the plate and not on a

rocking bar as at present, so that the hands could not be set from the pendant. Although the introduction of uniform sizes in the movements has effected a great improvement and facilitated the manufacture of English watches, there is still a great want of a general standard of measurement in the other branches of the trade, and a good deal of uncertainty exists as to what standard we ought to adopt. A good many of our scientists wish to force the metrical system upon us, but it has been the opinion of many eminent men (amongst whose names occur those of Sir J. Herschel, Sir C. Wheatstone, Sir E. Beckett, Sir Joseph Whitworth, Sir F. Bramwell, and others) that we should adhere to the English inch or foot as units of measurement. And, unless we altered the whole system of our weights and measures, it would convey very vague ideas of what we wished to represent to give dimensions in centimetres and weights in kilogrammes.

What watchmakers require is a set of gauges, similar to those made by Sir J. Whitworth for engineers, with the English inch as the unit of measurement, and the ounce troy as the unit of weight.

CHAPTER III.

MOVEMENTS.

32. **The Movement Trade.**—In the early days of watchmaking the manufacturer made the watch from the beginning to the finish, but for many years past making what is termed the movement has been, as we have already seen, a separate trade, carried on at a distance from any of the manufacturing centres (except in recent cases, where machinery is used to make the entire watch). This branch of watchmaking has, in this country, been confined exclusively to a remote part of Lancashire, the town of Prescot being the chief seat.

At first sight it seems rather unaccountable that this arrangement should obtain, since for many years nearly all English watches were made either in London or Coventry, and Prescot is not near to either of them, but although Liverpool has now almost abandoned chronometer and watch making, it was in Liverpool about the beginning of the present century that watchmaking became an important industry in England. As I have before said, the merits of Mudge's escapement were not appreciated at this time, and many others of inferior design continued to be made. Consequently when Peter Litherland obtained a patent in 1794 for the rack lever (made by Berthoud many years before), which was a great improvement on the verge and cylinder escapements, its introduction gave a great impetus to watchmaking in Liverpool. It was soon improved upon by Massey, who substituted the crank and lever for the rack and pinion, and afterwards by the introduction of the table roller, the ordinary form in use at present.

Robert Roskell, a Liverpool manufacturer, purchased some of these patents, and commenced making watches on a large scale, and, being a man of energy and enterprise, established agencies for their sale all over America. Mr. Roskell told me his father had sent 30,000 watches to South or Spanish America alone. Other makers followed his example, and watchmaking for export became an important business in Liverpool.

The movements of these lever watches were somewhat more complicated than those with verge or cylinder escapements, as they required the addition of the *going* fusee to prevent the escapement from setting when they were wound.

It soon became evident that it would be economising to have the rougher part of the watch made by less skilled workmen than those employed to complete it, and that it would also effect a saving to have the work done in a village, where living was cheaper than in a large and populous town. It was thus that Prescot, being

close to Liverpool, became the seat of the movement trade, as, besides having a small local watchmaking trade, it had a reputation for the production of the best files and other tools used in the manufacture, and although from various reasons chronometer and watch making have declined in Liverpool, movement making is so firmly established in Prescot and its vicinity that there is little likelihood of it now migrating to either London or Coventry, which are the present manufacturing centres.

It certainly would be better for the trade if Prescot were situated between the two latter places, but the facilities afforded for travelling and sending parcels by railways, and by the still readier convenience of the post-office, have minimised the disadvantages of making the different parts of the watch in different places; in fact, it is often found more convenient to send to Lancashire for an odd wheel or pinion than to the movement maker's agency in London or Coventry—the tool shop—for it. The movement makers having never been watchmakers, the conflicting opinions and requirements of those who employed them have prevented them from making universal and radical improvements in the movement, and the want of intelligent consideration and concert amongst watchmakers has allowed a bad model for a cheap watch to keep the field until our trade in this article has in a great measure been taken from us.

This model, which is the typical English watch of commerce, is known as the "full plate." All verge watches had of necessity "full plate" movements, as the crown or escape wheel had to be placed in a potance horizontally, so that the teeth might act on the verge or pallets at right angles to the plane of the balance, and upon the introduction of the cylinder escapement the same form of movement was adhered to. The Swiss had the sense to reject it, finding how suitable the cylinder was for thin watches, and by placing all the wheels of the train and the escapement on one plate under cocks

or bars, demonstrated the superiority of such an arrangement, which suggested the $\frac{3}{4}$-plate movement.* This $\frac{3}{4}$- or $\frac{1}{2}$-plate movement was generally adopted by the Liverpool manufacturers of this period, and had a good deal to do with the success of their commercial enterprises, as a watch of this form was more elegant, was strong and sound, and easily repaired when out of order.

33. **The Full Plate.**—The great bulk of English watches that are at present made are full plate, and although no watchmaker requires to be told what a full plate watch is, I will describe it in order that I may point out what I consider some of its defects.

In the first place, it is thick and clumsy-looking; the hands cannot be set without opening the glass cover, and as the square of the cannon pinion must project above the minute hand, in order that the key may catch it, there must be more room between the dial and the glass than is wanted for the hands; this square, being of the same size as the winding square, makes the boss or centre of the hour hand large and unsightly, and necessitates a correspondingly large hole in the dial, and some skill is required when setting the hands to prevent the minute hand from being pressed down and catching the hour or seconds hands when passing over them, and thereby stopping the watch. (There is an arrangement for setting full plate watches from the back, but it is so bad that it is not worth describing.)

These are what may be called its external defects, but the worst faults of this form of movement are in its construction. The balance and index, being placed above the top plate, not only make the watch much thicker, but as the potance, which carries the jewel-hole for the lower balance staff pivot has a narrow sole, and is attached to the plate in the same manner as the balance cock, with steady pins and a screw, any shifting of this

* Reid prophesied the abandonment of the cylinder escapement, partly on the ground that it necessitated the making of *thicker* watches.

piece very often puts the escapement depth out and the balance out of upright, thereby causing stoppage or irregularity in the going of the watch from causes that are very difficult for the ordinary jobber to ascertain.

The barrel in full plate watches is always let through the top plate for the purpose of giving additional width to the mainspring, and, as the movement is very narrow in proportion to its size, the fusee (which cannot be let through the plate, and is consequently much lower than the barrel) is necessarily very thin, and a chain out of all proportion to the strength of the mainspring has to be used. The constant breaking of these chains has done much to bring English watches into disrepute, and to diminish their sale in foreign countries.

The stupid arrangement of putting two pillars between the barrel and the fusee when one would be better, and the intervening stop work and maintaining-power click, render putting the chain on the fusee a trying operation to any workman not brought up to it. This, added to the difficulty foreign workmen find in putting the pallets into their place in these watches, has caused them to exclaim against the stupidity of the English full plate watch, and yet the full plate is still considered to be *the* English watch, nearly all the Coventry watches being of that construction. One movement maker in Prescot informs me that he makes five gross of these movements a week, and a few years ago the same firm made nearly double that number.

34. **Mr. Wycherley's Improvements.**—Mr. Wycherley deserves the gratitude of watchmakers for his great ingenuity in inventing and adapting the numerous machine tools used in making the movements under his system to their various requirements, and for the enterprise and perseverance which he has displayed in carrying out a reform in this branch of watchmaking in the face of the opposition of workmen who thought such an innovation inimical to their interests. But the greatest improvement introduced by this system was that

of making the movements to definite standard gauges, so that the dials, caps, and cases can be made without the movements, and the wheels, barrels, and other parts are practically interchangeable *in their unfinished state.* Other firms in Prescot have followed Mr. Wycherley's example by adopting the factory system with steam-power, a new feature of which is the employment of a good many young women and girls.

35. **Movement Plates.**—The plates for the movements are stamped out of hard rolled brass in Birmingham, where facilities for doing such heavy work are greater than at Prescot, some of the Swiss manufacturers obtaining their blanks from the same quarter. This brass is of the best quality, and what is technically known as "hard brass." After being rolled hard and stamped out the blanks are again hammered on an anvil until they will ring like steel. All the circular parts are stamped and the cocks and bars are shaped with cutters, labour-saving machines being employed wherever it is found practicable.

36. **Screw-making.**—But there are certain things which cannot be done economically by machinery even at this stage, and screw-making seems to be one of them. In Mr. Wycherley's factory I saw a man making screws in an ordinary hand-throw: he turned down the body of the screw, tapped it, rounded and burnished the end, tapered the head, and cut it off in fifteen seconds. These were bar screws, pillar screws took a little longer; he made three of these a minute, repeating this operation several times while I watched him, and he appeared to be in no hurry over his work. If then a man can make by hand in this way 1,800 good screws in a day of 10 hours, watchmaking can gain little by having them made by a machine; indeed, a screw-making machine was superseded by this man.

37. **Pinion-making.**—Pinion-making is still a separate branch, as, with the exception of large pinions which are cut out of the solid, watch pinions are made from

pinion-wire, *i.e.*, wire drawn with the leaves formed. These are cut in an engine afterwards, and, after hardening and tempering, the leaves are polished. The small wheels are first stamped out and, after being turned to size, several of them are put into an engine and cut at the same time.

38. **Wheel Teeth.**—As the numbers of wheel teeth and pinion leaves are referred to in the chapter on Trains, it is only necessary to say here that the great majority of English watches have lower numbers than those recommended by me; there are various reasons for this, the chief probably being that the teeth being a little larger the depth will run with less accurate pitching. They are also cheaper, since, under the old system, as I have already said, higher numbers meant superior workmanship, and the workman demanded a price out of proportion to the extra labour entailed. Wheels with five arms are also characteristic of a commoner movement, the spaces between the arms being, until lately, punched out separately, and the wheels crossed and finished by hand, it being more difficult thus to bring the bars or arms exactly opposite to one another, as they are in the six-armed wheels of the best movements, than to cross out a wheel with an odd number of arms. Now, however, the spaces can be all punched out at once, and so cleanly that the wheels require only a little scraping before being gilt, so that a six-arm wheel is as easily made as a five-armed one.

39. **Pillar Plates.** — Some watchmakers have the pillar plate made solid, with just a sufficient rim left round the edge for the dial to rest on, but there is no advantage in this; it makes the watch unnecessarily heavy, and adds to the difficulty of manufacturing; it is much better to have the back of the plate turned out with one bar for the third and fourth wheels and the escapement, and another for the fusee. Many movements have been made with a separate bar for the escapement, but for what purpose it would be difficult

ment, a description of which will be found in its proper place.

As the invariable length of the pendulum is such an important factor in the performance of the clock, it was natural that its *compensation* for varying temperatures should have been one of the first great problems early horologists had to solve; in fact it is a subject which has occupied the minds of clockmakers even to the present day.

The **principle of Compensation** adopted has nearly always been the construction of the pendulum with two or more metals of different expansibility, so arranged that the position of the centre of oscillation shall remain approximately unaltered.

The most successful inventions have been, for regulators and house clocks, the mercurial and gridiron pendulums, and for large turret clocks, the zinc and iron compensation which, while being as effective as the mercurial, is a good deal cheaper.

11. The **English Clock Trade**, with the exception of the trade in turret clocks, has never reached to any degree of importance, and could never at any time have been classed with our large national industries; while of late years the trade in house clocks may be said to have almost entirely left us. The French have taken what may be called the drawing-room clock trade out of our hands, the proverbially elegant taste of that nation, aided by a better artistic education and a more energetic and intelligent application of it amongst those interested in the manufacture, having enabled makers to produce clocks which in quality and price have entirely superseded the same class of English goods. English makers, having unfortunately used no efforts to supply obvious public requirements either in the way of cheapness or elegance, suddenly awoke to the fact that their trade was gone; so that with the exception of turret clocks, and of first-rate regulators and quarter clocks, there are now only a few eight-day

e of centres" (*i.e.*, a straight line
entre of wheels gearing together),
minimum of the drop or shake of
is best attained by the use of
the drivers and hypocycloidal for
are the only shaped teeth we

curve generated by any point in
circle which rolls on the outside
fixed circle.
curve generated by any point in
hich rolls within the circum-

a D traced by any point, D, in
the pitch circle A B C is an

d by the point D in the circle D
rcle G is a hypocycloid to that

le is exactly half the diameter
which it rolls, the hypocycloid
line radial to the pitch circle.
suitable shape for the acting
The pitch circles of wheels
metrical circles by which the
locks are determined, and the
are constructed.
pitch circles of wheels and
portional to the number of
in a given time, and the
ing together with their teeth
ized generating circles, is the
les rolled on one another with-
he number of teeth, of wheels,
nal to their pitch circles.
ing part of the tooth of the
its pitch circle, and the hypo-
of the tooth of the follower

to say, as it is evidently better to have all the pivots of the smaller pieces to work in the same bar.

It was at one time the custom to make the pillar plate of the same thickness as the top plate, and to fit a brass edge to it, the dial being pinned through its own small projecting feet to the brass edge, and the brass edge having feet projecting through the pillar plate, to which it was pinned, in the same way as those of an ordinary modern dial. Nothing worse than this could possibly be invented, yet, when in Lancashire a few years ago, I saw a number of these movements that were being made to order.

In a fusee movement the barrel and great wheel should be as large as possible (they should come flush with the step at the edge of the pillar plate), provided the watch is to have a dome case, as then the chain (even if it projects beyond the edge of the top plate) will be free of the inside of the case, and the fusee detent, which keeps the steel maintaining-power wheel in position while the watch is being wound, should be planted to the right of the great wheel with a short spring.

CHAPTER IV.

WHEELS AND PINIONS.

40. **Drivers and Followers.**—Wheels and pinions are divided into two kinds, which are called drivers and followers. In watches and clocks the wheels are the drivers and the pinions the followers, except in the dial wheels, or motion work, the winding work of keyless watches, and some of the parts of complicated Swiss watches.

The main object to be aimed at in the gearing of wheels is to avoid "engaging friction," *i.e.*, friction which takes place through the teeth coming into action before

what is called the "line of centres" (*i.e.*, a straight line drawn from centre to centre of wheels gearing together), and the reduction to a minimum of the drop or shake of the teeth. This object is best attained by the use of epicycloidal teeth for the drivers and hypocycloidal for the followers, and these are the only shaped teeth we have to consider.

An epicycloid is a curve generated by any point in the plane of a movable circle which rolls on the outside of the circumference of a fixed circle.

A hypocycloid is a curve generated by any point in the plane of a circle which rolls within the circumference of a fixed circle.

In Fig. 2, the curve G D traced by any point, D, in the circle, D rolling on the pitch circle A B C is an epicycloid to A B C.

And the line G D traced by the point D in the circle D which rolls within the circle G is a hypocycloid to that circle.

If the generating circle is exactly half the diameter of the pitch circle within which it rolls, the hypocycloid traced will be a straight line radial to the pitch circle. This is a very usual and suitable shape for the acting part of pinion leaves. The pitch circles of wheels and pinions are the geometrical circles by which the calibers of watches and clocks are determined, and the bases from which the teeth are constructed.

The diameters of the pitch circles of wheels and pinions are inversely proportional to the number of revolutions made by them in a given time, and the velocity of wheels gearing together with their teeth formed from the same sized generating circles, is the same as if their pitch circles rolled on one another without teeth at all, so that the number of teeth, of wheels, and pinions are proportional to their pitch circles.

The epicycloid or acting part of the tooth of the driver should be outside its pitch circle, and the hypocycloid or acting part of the tooth of the follower

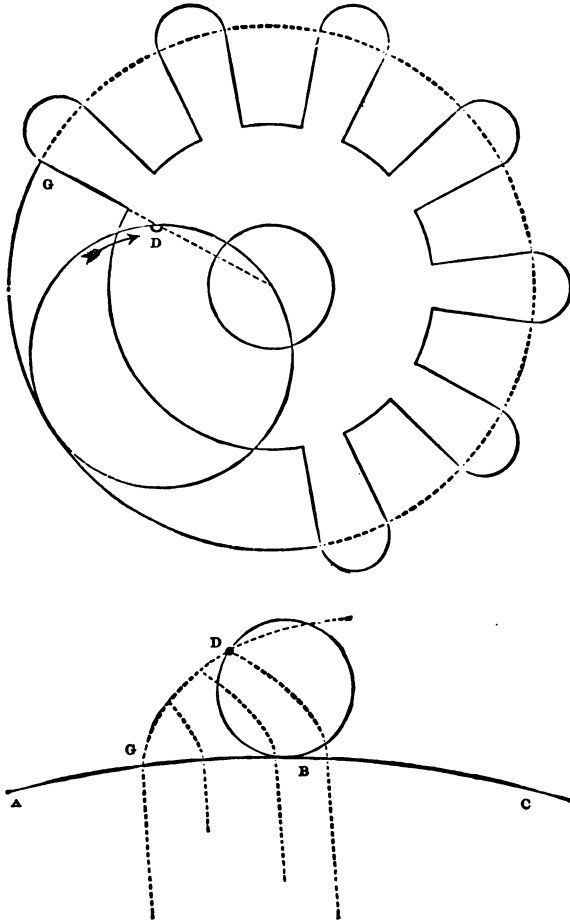

Fig. 2.—Generating Circles for Epicycloid and Hypocycloid.

should be inside its pitch circle in order to ensure a proper action.

The same sized rollers must be used for tracing the epicycloids and hypocycloids of all wheels and pinions gearing together, when the curves traced will always intersect at the point D in the generating circle D; in whatever position the teeth may be with regard to one another, the hypocycloid will always be tangential to the epicycloid at that point of contact, the wheel and pinion will both travel at the same speed and with the smallest possible absorption of power, and the resistance will remain uniform throughout the lead provided sufficiently high numbers are used to prevent all engaging friction.

Although teeth properly constructed in this manner are practically the nearest thing to perfection it is possible to attain, they have the disadvantage of a slight rubbing friction on one another in receding from the line of centres; and what are called involute teeth (*i.e.*, teeth having the acting curves of the shape described by any point in a string unwound off the circumference of a circle) were sometimes used, in order to prevent this, and where several pinions geared with the same wheel, in the old French turret clocks and train remontoirs; but any advantage they possess in the saving of friction on the teeth is more than counterbalanced by the friction on the pivots caused by their obliquity and the squeezing pressure they produce, so that although they are theoretically the perfect teeth, the surfaces rolling on one another throughout the contact without any rubbing friction, they are now looked upon as entirely useless.

41. **Helical Teeth.**—Another tooth which has been almost, if not quite, discarded, is the helical or helix (so called from the resemblance they bear to a spiral), which is a very good tooth in so far as, with it the action takes place at the line of centres, but it is not suitable for watch or clock work, as it throws great end pressure on the opposite arbors.

A modification of the helical tooth, invented by James White and called White's gearing, is sometimes used in large machinery. It consists of several wheels put together with the teeth of each a little in advance of those of the other, but this would be too clumsy for clock or watch work.

42. **Construction of Wheel Teeth.** — In the event of two or more pinions of different sizes gearing with the same wheel, or with wheels of the same size as one another, the generating circle used in forming the teeth should not be larger than half the size of the smallest pitch circle, otherwise the pinion flanks would converge more than the radii and be too weak. In dividing off-wheels and pinions for the teeth, the necessary freedom may be given by allowing one-fifth of the width of the leaf in the pinion for shake, the teeth and spaces in the wheel being equally divided. In the case of low numbered pinions, as much as possible should be allowed for spaces, consistent with the strength of the pinion, in order to allow of a longer epicycloid to the wheel tooth, and so by getting a longer lead, to bring the action nearer to the line of centres, and thus avoid the greater engaging friction which would otherwise take place.

The addenda or points of the pinion leaves beyond the pitch circle are sometimes of semicircular and sometimes of an ogive form (the epicycloid of the tooth is commonly called the ogive from its resemblance in shape to the Gothic vault). Although theoretically addenda of any shape are unnecessary, the latter is a very good shape for the points of the teeth, as with it a safe depth is ensured, which is a matter of great importance in practice; and although high-numbered pinions would work very well for a time without addenda to the teeth at all, the depths would soon become too shallow from the wearing of the holes when not jewelled.

In sectoring the wheels and pinions of watches and clocks, it is found best to allow a shade more for the size

of the wheel circle in proportion to that of the pinion, in order to secure a good "lead," as it is called, and to prevent any engaging friction or butting that might occur from the teeth not being quite accurate as to size or shape; the wheel by thus travelling a little faster than the pinion, carries the pair or set of teeth that are in action so far beyond, that those approaching one another do not come in contact until they are at or near the line of centres.

Professor Willis, who, in his *Principles of Mechanism*, has clearly expounded the theory of depths and the shapes of wheel teeth, has shown that no pinion of less than eleven leaves is entirely without engaging friction, though a well-sized pinion of ten comes into action so near to the line of centres that it is hardly perceptible, and therefore no pinion of less than ten should ever be used in machinery as a follower where it can be avoided, except the lantern pinion.

The lantern pinion, as used in the German clocks, is a very good form of pinion for a follower, all the action taking place, even in low-numbered ones, after the line of centres; but it is not suitable for a driver, because then the action would be reversed, and would come all before the line of centres. It is much used in French turret clocks, but it is not used here, though there is no reason why it should not be, it being especially suited for the cheaper English clocks, such as dials, &c., and it might be made as cheaply as the ordinary drawn pinions. Of course, it could not be used for watches or very small clocks, as the collets or bushes into which the pins forming the leaves are riveted would take up too much room.

In gauging wheels and pinions round holes should be used as sizes where practicable, as the full diameter cannot be measured on a slide gauge if the teeth are not immediately opposite one another; and it should be remembered in depthing wheels and pinions that it is the *pitch* circles of the wheels and pinions, and not the full

diameters, which are proportional to the number of teeth contained in them, so that allowance must be made for the parts beyond the pitch circles, which vary with the width of the teeth and the size of the generating circle used in tracing them.

In the train wheels of clocks and watches the full diameter is about 3·75 per cent. larger than the pitch diameter, and in high-numbered pinions the diameter is increased from 11·25 to 12 per cent., according to whether the addendum used is semicircular or epicycloidal. Thus, with a wheel of 60 and a pinion of 10 (in accordance with the rule given that the numbers of teeth of wheels and pinions are proportional to their pitch circles), the distance between the centres would be 70 and the diameters of the pitch circles 60 and 10 respectively; then the full diameter of the wheel would be 62·25, and that of the pinion 11·125, if its addenda were semicircular, or 11·2 if epicycloidal.

The flanks of wheel teeth are usually either parallel to each other or radial, and, in order to free the addenda of the pinion, are cut within the pitch circle. The spaces are usually cut square to the bottom, but they should, where there is much stress upon them, be left rounded at the base of the tooth for strength, as in the great wheel of a modern English watch, which might otherwise strip its teeth in the event of a sudden strain taking place, such as the mainspring breaking or the winder being turned the wrong way.

The Americans sometimes use a pinion (Fog's patent) which screws on to the centre wheel, as a safeguard, but there is no necessity for this precaution where the fusee is used. Very small pinions should not be cut with radial flanks, or they would be too weak, and they should, where there is room, have the corners at the bases of the teeth left rounded as above. The teeth of all drivers, whether wheels or pinions, should be of epicycloidal form, and those of all followers of hypocycloidal.

Wheels and pinions that are to act alternately as

drivers and followers should have their teeth as full as possible, of epicycloidal form, with the points taken off.

The pinions of all the better sorts of clocks, like those of watches, are cut in an engine, those of the common ones being made out of pinion wire (*i.e.*, wire drawn through a plate which forms the leaves, which are afterwards partially turned off to form the arbors), some of the best pinions being drawn first and finished afterwards in the engine.

Bevelled wheels are frequently used in modern turret clocks for changing the plane of motion of the flies, hands, &c., and in the winding work of keyless watches. The angles made by the teeth with their arbors should be inversely proportional to the length of the arbors when produced till they meet, and every part of each tooth should converge to this point as if its acting surface were generated by a cone, as it should be theoretically. As in plain wheels and pinions, their pitch diameters are proportional to the number of teeth they contain.

In watch work bevelled pinions are seldom or never formed correctly, the teeth being formed by one cutter, which cuts the spaces out the same width throughout, instead of tapering them, as they should be, and consequently the teeth (even if they are cut at the right angle, which they seldom are) are only touching at the extreme points; but as they are only used for the winding work, and are only in action for a short time, not much attention need be paid to this, the main object being to get a good depth and a smooth action, and this will be best secured by attention to the shape of the teeth and to their angle with regard to one another.

In keyless mechanism the rocking-bar should always, where possible, be next to the plate under the great winding wheel, as this will allow of a larger diameter for the pinion, and any inequalities in the action through the teeth being cut the wrong shape, &c., will be less felt, and the wear on them will not be so great

In Fig. 3 is shown a pinion E B F, the diameter of whose pitch circle is two inches, gearing with a wheel D C E, whose diameter of pitch circle is four inches; the arbors being produced till they meet at the point A. The line A B measures two inches, and the line A C one inch.

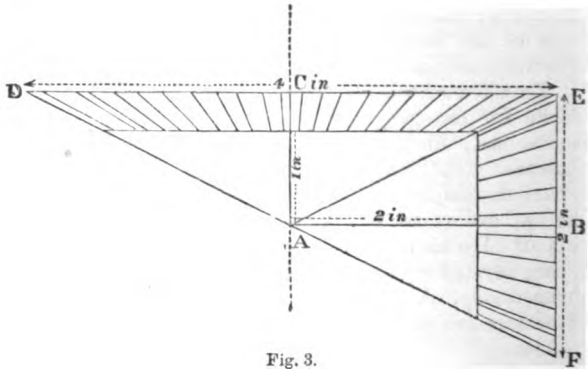

Fig. 3.

Then the sum of the lines C A, A B : the sum of the angles C A E, E A B : : A B : C A E, or as C A : E A B. And in order to find at what angle the wheel ought to be cut, we have by trigonometry

$$\tan. \text{CAE} = \frac{\text{CE}}{\text{CA}} = \frac{\text{AB}}{\text{CA}} = \frac{2}{1} = 63^\circ\ 26';$$

$$\text{or, } \tan. \text{BAE} = \frac{\text{BE}}{\text{AB}} = \frac{\text{AC}}{\text{AB}} = \frac{1}{2} = 26^\circ\ 34'.$$

Or a sketch similar to Fig. 3 may be drawn to scale, and the angles measured off by means of a protractor.

Those who wish to study the whole theory of wheel teeth and their construction, cannot do better than refer to the exhaustive treatise on the subject by Sir G. B. Airy, in Vol. II. of the "Cambridge Transactions."

CHAPTER V.

TRAINS.

43. **Trains.**—The train of wheels in a watch or clock is the method of applying and the medium for regulating and distributing the power from the prime mover to the escapement, which regulates the speed.

The power exerted by wheels on pinions is inversely proportional to the relative diameters of their pitch circles, and they may for purposes of calculation be considered as a series of levers, the centres being the fulcrums and the acting part of each tooth at the line of centres, being their effective length.

The importance of taking the resistance of trains into consideration is continually exemplified in the absurd clocks which are frequently constructed to go for six months, or a year or so, without rewinding, but which never do go even when much heavier weights or stronger springs than the original are put to them, and the only cure for which is to increase the leverage by changing some of the wheels and pinions, or by increasing the size of the barrels, which of course shortens the time of their gong.

The trains of wheels used in modern English watches are the 18,000, the 16,200, and the 14,400, so called because of the number of vibrations made by the balance in the hour. The total number of vibrations made by the escapement of a watch or clock before the power is expended is dependent on the relative number of teeth in the wheels and pinions. The time of the vibrations is regulated by the balance spring or by the pendulum.

The 16,200 is the train nearly always used here in lever watches, and the 18,000 in pocket chronometers and duplex escaped watches. The Swiss generally use

the latter train in all their watches, it being better adapted for their frictional cylinder escapement, with its short vibrations; indeed, for any escapement where the watch is without the fusee adjustment, the unequal pull of the mainspring is less felt with the quick train than with the slow one. The falling off in the arc of vibration, consequent on the mainspring unwinding itself, with a 16,200 train with the going barrel, is fully a quarter of a turn in the 24 hours, and the watch loses as the power decreases; this difference is not so great and does not affect the going of the watch so much with the 18,000 train, the balance spring being relatively stronger, and this train is accordingly used in nearly all foreign watches that are not intended to be sold as of English make. On the other hand, with the fusee adjustment, the arc remains constant throughout the time of going of the watch, and the balance of power between the balance and its spring being enabled to be better maintained with the 16,200 train, this train is accepted as the best for English lever watches. In all old watches lower-numbered wheels and pinions will be found than are at present used, the importance of high-numbered pinions having been only comparatively lately appreciated, and Reid (see his "Treatise on Clock and Watch Making") and his contemporaries always refer in their tables of trains to lower numbers than it is now thought necessary to use even in the commonest watches. The watches they referred to, however, which were those that had superseded the old "turnips," had mostly either verge or cylinder escapements, with trains arranged to beat somewhere between 17,000 and 18,000 in the hour. They seldom showed the seconds on the dial, and as the number of revolutions of the fourth wheel bore no absolute relation to that of the centre, the numbers of the wheels and pinions varied very much, but 7 and 6 are the numbers usually found in the last three pinions of the train. When, however, the lever escapement became general higher numbers

were employed, but with slower trains (of somewhere between 14,000 and 15,000 vibrations in the hour).

These slow trains are never now used in pocket watches, as it is found that as the balance moves slowly, the spring is consequently very weak in proportion to its weight and diameter, and does not sufficiently control the movement, so that any irregularity in the force transmitted from the mainspring to the escapement is very much felt, and has an effect on the length of the vibrations. In addition to this, the jars and motions to which a watch is subjected when in use check or accelerate the vibrations to a greater extent than if the spring were proportionally stronger.

In the best watches, with what are known as high-numbered movements, the train used is as follows :—

	Great Wheel	Centre	Third	Fourth	Escape
Wheel . . .	84	80	75	72	15
Pinion . . .		12	10	10	8

The large majority of English watches have the following train :—

	Great Wheel	Centre	Third	Fourth	Escape
Wheel . . .	75	64	60	63	15
Pinion . . .		10	8	8	7

Though I prefer and always use in watches of an inferior quality :—

	Great Wheel	Centre	Third	Fourth	Escape
Wheel . . .	84	64	60	63	15
Pinion . . .		12	8	8	7

It has been shown that there would be a great advantage in using pinions of even higher numbers than it is possible to employ in watches, and it costs very little more to make a pinion with ten leaves than to make one with eight; but "high numbers" are usually a distinctive feature of a movement of superior quality.

In small watches where the high numbers would greatly reduce the size of the teeth, the lowest numbers given above are found the best, as great accuracy is not

often sought for, nor is it attainable, in watches of very small size. In watches with the chronometer and duplex escapements the 18,000 train is used. I have seen Swiss watches with even a faster train, but such watches are wrong in principle, as the balance must be necessarily made very small and light, and the balance spring must be disproportionately strong.

It has been thought by some watchmakers that as the balance in these escapements receives the impulse only at alternate beats, the vibrations should be quicker, but a much better reason for applying a fast train to these watches is, that if there is not what is called a "banking" to check the balance in case any external motion or jerk causes it to exceed its normal arc of vibration sufficiently to allow of several of the escape wheel teeth passing the pallet at once, what is termed "tripping" will take place, and the watch will run half a minute or so in a few seconds, and this is not so liable to occur with the quick train on account of its shorter vibrations.

Ships' chronometers are constructed with trains of 14,400, giving four beats per second, and as, like the pocket watch with this escapement, the impulse is given at alternate beats, the seconds hand moves at every half second.

The seconds being thus evenly divided, it is much easier to ascertain the true time or to take the rate, either by observing the seconds hand or by listening to the beats, with one of these instruments, than with a pocket watch in which the seconds are unequally divided; and as ships' chronometers are always kept in a horizontal position by being hung in gimbals, and are not subjected to such outward disturbing influences as watches, the vibrations are not interrupted, and there is not the same necessity for having a faster train.

The movement of a marine chronometer being precisely similar to that of its prototype, the watch--save that there is proportionally more room—it allows of a higher-numbered train. Those now constructed are mostly

what are called "two-day" chronometers, and go for fifty-six hours without re-winding, the train usually adopted being—

	Great Wheel	Centre	Third	Fourth	Escape
Wheel	90	90	80	80	15
Pinion		14	12	10	10

The only difference between the "eight-day" and "two-day" chronometers is in the length of time they will go without rewinding; hence their trains differ only in the number of teeth and leaves in the great wheel and centre pinion, and the turns made by the chain on the fusee.

In calculating the train of wheels of a watch or clock, all that we have theoretically to consider is the ratio of speed of the first or great wheel to the last or escape.

The two facts that regulate the relation of the numbers of teeth and the rates of revolution of the wheels of a train are the following: (1) the number of turns in a given time for a wheel and pinion on the same axis is the same; (2) for wheels that are geared together, the same number of teeth in both pass the same point in a given time; hence the product of number of teeth in the wheel by number of turns in a given time is the same for both.

Let E, e stand for number of teeth in wheel and pinion. Then the train is represented by

$$\begin{array}{cccc} E_1 & E_2 & E_3 & E_4, \\ & e_2 & e_3 & e_4 \quad e_5. \end{array}$$

As we are concerned only with the number of revolutions of the wheels from the centre E_2 to the pinion e_5, we may represent these numbers thus :—

$$\begin{array}{cccccccc} E_1 & e_2 & E_2 & e_3 & E_3 & e_4 & E_4 & e_5, \\ T_1 & T_1 & T_2 & T_2 & T_3 & T_3 & T_4. & \end{array}$$

Applying the second of the above rules to these symbols, we have the following equations :—

$$T_1 E_2 = T_2 e_3; \; T_2 E_3 = T_3 e_4; \; T_3 E_4 = T_4 e_5.$$

Multiplying the equations together, we obtain :—

$$E_2\, E_3\, E_4\, T_1 = e_3\, e_4\, e_5\, T_4.$$

Hence $$T_1 : T_4 :: e_3\, e_4\, e_5 : E_2\, E_3\, E_4.$$

Or the result may be otherwise expressed, as follows :—

To ascertain the ratio of the number of turns in a given time between any wheels in a train, multiply together the number of teeth of the slowest with that of every intermediate wheel, and divide the product by the number of leaves in the fastest and all the intermediate pinions multiplied together. Example: Required the ratio of speed between a centre wheel of 80 teeth (where the third has 75 with a pinion of 10, and the fourth has 72 with a pinion of 10), and the escape wheel with a pinion of 8. Then

$$80 \times \frac{75}{10} \times \frac{72}{10} \times \tfrac{1}{8} = 540,$$

which is the ratio required, the escape wheel turning 540 times to once of the centre wheel; and this number multiplied by twice the number of teeth in the escape wheel, will give the number of beats made by the escapement in the hour,—the number of beats being determined by the velocity ratio between the centre and escape wheels, and the length of time the watch will go by the number of teeth in the great wheel, the leaves in the centre pinion, and the number of turns made by the barrel (if a going barrel watch) or by the chain on the fusee.

Take the first of the trains given on page 55, and let it be required to find the number of turns made while the centre wheel turns once :—

$$T_1\, E_2 = T_2\, e_3 \text{ gives } 1 \times 80 = T_2 \times 10, \text{ or } T_2 = 8.$$
$$T_2\, E_3 = T_3\, e_4 \text{ gives } 8 \times 75 = T_3 \times 10, \text{ or } T_3 = 60.$$
$$T_3\, E_4 = T_4\, e_5 \text{ gives } 60 \times 72 = T_4 \times 8, \text{ or } T_4 = 540.$$

Again, suppose we know that the ratios of the numbers of turns are as 1, 8, 60, 540, and also that the number of

teeth in the escape pinion is 8, then we can find the number of teeth in the other wheels thus :—

$$T_3\ E_4 = T_4\ e_5 \text{ gives } 60 \times E_4 = 540 \times 8, \text{ or } E_4 = 72,$$

and so on.

To find the number of teeth of an intermediate wheel:—The number of turns made by the required wheel : the number made by the next faster : : the number of leaves in the next faster pinion : the number of the wheel required.

Example.—Find the number of teeth in the fourth wheel in the first of the foregoing trains, having given the number of turns in the last two, and number of teeth in escape pinion:—

Then $60 : 540 :: 8 : x$

$$\frac{540 \times 8}{60} = 72, \text{ the fourth wheel required.}$$

To find the number of the third wheel pinion:—Multiply the number of teeth in the wheel by its number of revolutions, and divide the product by the number of revolutions of the fourth wheel.

$$\text{Example: } \frac{75 \times 8}{60} = 10, \text{ the third pinion required.}$$

To find the number of the fourth wheel pinion:—Multiply the number of teeth in the fourth wheel by the number of teeth in the third, and divide by the number of revolutions of the escape wheel.

$$\text{Example: } \frac{72 \times 75}{540} = 10, \text{ the fourth pinion required.}$$

To find the number of the escape wheel pinion:—Multiply the number of teeth in the fourth wheel by its number of revolutions, and divide by the number of revolutions of the escape wheel.

$$\text{Example: } \frac{72 \times 60}{540} = 8, \text{ the escape pinion required.}$$

To find the number of turns a barrel or fusee should

make in order to allow a watch to go for a certain number of hours (say thirty) :—Multiply the number of leaves in the centre pinion by the number of hours required, and divide by the number of teeth in the great wheel.

$$\text{Example: } \frac{30 \times 12}{84} = 4\tfrac{2}{7}, \text{ the required turns.}$$

This is the shortest way; but the usual method adopted by finishers is to divide the number of teeth in the great wheel by the number of leaves in the pinion, and to divide the number of hours required by the quotient.

$$\text{Example: } 84 \div 12 = 7; \text{ and } 30 \div 7 = 4\tfrac{2}{7}, \text{ the required turns.}$$

To find the number of great wheel teeth :—Multiply the number of the centre pinion leaves by the number of hours the watch is required to go, and divide by the number of turns made by the fusee or barrel.

$$\text{Example: } \frac{12 \times 30}{4\tfrac{2}{7}} = 84, \text{ the number of teeth required.}$$

To find the number of centre pinion leaves :—Multiply the number of the great wheel teeth by the number of turns of the fusee or barrel, and divide by the number of hours the watch is required to go.

$$\text{Example: } \frac{84 \times 4\tfrac{2}{7}}{30} = 12, \text{ the centre pinion leaves required.}$$

To find the number of hours a watch will go :—Multiply the number of great wheel teeth by the number of turns of barrel or fusee, and divide by the number of centre pinion leaves.

$$\text{Example: } \frac{84 \times 4\tfrac{2}{7}}{12} = 30, \text{ the hours required.}$$

44. **Motion Wheels.**—The wheels that carry the hands are called the motion wheels, and consist of the cannon pinion, the hour wheel, and the minute wheel and pinion.

The minute wheel and its pinion have nothing to do with the carrying of the hands, but are simply intermediate between the cannon pinion and the hour wheel, for the purpose of regulating the speed of the latter, which is as 1 of the hour wheel to 12 of the cannon pinion. They rotate on a stud, which is screwed into the plate in the plane of the wheel and pinion with which they gear, and are usually kept in their place by the dial of the watch.

The hour wheel turns on the cannon pinion, and carries the hour hand, and the cannon pinion carries the minute hand.

In a full plate watch the cannon pinion is fixed to the arbor of the centre wheel by being snapped, or sprung on, sufficiently tightly to carry the hand, but not to prevent it from being turned on the arbor when the hands are being set. The square upon which the hand is fitted is left projecting a little, so that a key may be applied to it for this purpose.

In a three-quarter plate movement the centre pinion is hollow, and what is called the set-hand piece goes through it, and has the cannon pinion pushed tightly on the projecting part of it. This piece has a square at the other end of it which enables the watch to be set from the back, but this point I shall notice more fully further on.

The motion wheels have not been generally considered as part of the movement of the watch, but have been made or supplied by the motion maker, whose principal business it is to make the bolt and joint that fix the movement in its place, in what are called double-bottom cases. They have usually been inferior to the other parts of the watch, and very little attention has been paid to their application or construction.

As the motion pinions are always acting as drivers (except during the short time of setting the hands in keyless watches, which is not worth considering), they should be sectored large and have epicycloidal teeth, and the cannon pinion should always be as large as possible, in order to allow of its being properly turned out at the back to free

the centre stopping, which is left projecting, and, as there should be no shake, the minute wheel and its pinion should be pitched as deeply as possible, consistent, however, with ensuring perfect freedom of gearing, the motion wheels in some Swiss watches being pitched so deeply that they will not run at all.

The following are very good and convenient numbers for motion wheels :—

Cannon pinion	14
Hour wheel	48
Minute wheel and pinion	42 and 12

For smaller watches :—

Cannon pinion	12
Hour wheel	40
Minute wheel and pinion	36 and 10

The numbers used in ships' chronometers are :—

Cannon pinion	14
Hour wheel	54
Minute wheel and pinion	56 and 18

The cannon pinion in these chronometers is snapped on to the arbor of the centre wheel in the same way as in a full plate watch. This is also a very good plan for keyless watches, where the hands are set from the pendant through the motion wheels, as the centre pinion and arbor may thus be left solid. In these watches the minute wheel should be made of steel and cut with fewer teeth for strength.

To find the numbers of the motion pinions :—Multiply together the numbers of teeth of the minute and hour wheels, and divide the product by twelve (the ratio of the turns between the hour wheel and the cannon pinion) and the result will be the same as the product of the numbers for the two pinions multiplied together. Thus, by dividing the number obtained by the number for either pinion, the quotient will be the number for the other.

In contriving a train for the motion work, it is only

necessary to remember that the product of the numbers of the wheels multiplied together must be twelve times that of the numbers of the pinions multiplied together.

CHAPTER VI.

THE FUSEE AND MAINSPRING.

45. **The Fusee.**—The fusee is a brass cone mounted on an arbor, and its use is to equalise the pull of the mainspring, which is greater when wound round the barrel arbor than when it has expanded round the inner circumference of the barrel. It has a spiral groove cut on it to hold the chain and to keep it on its edge, and is much

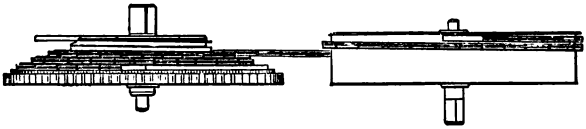

Fig. 4.—Fusee and Barrel with Chain attached.

larger at one end than the other; when the spring is wound up by the chain being wound on to the fusee and is pulling most, the pull is first exerted on the smaller end of the cone, and as the spring unwinds and gradually pulls less, the leverage on the cone increases, the rate of increase being such as constitutes a perfect adjustment of the mainspring.

Without Harrison's maintaining power, the fusee would not have been of much advantage to watches that were required to keep correct time, as the act of winding takes the power of the mainspring from the great wheel, and the watch would either go backwards or stop altogether while being wound.

Fig. 4 shows the fusee and barrel in elevation with chain attached (partly on each); it also shows the position of the hooks by which the chain is attached.

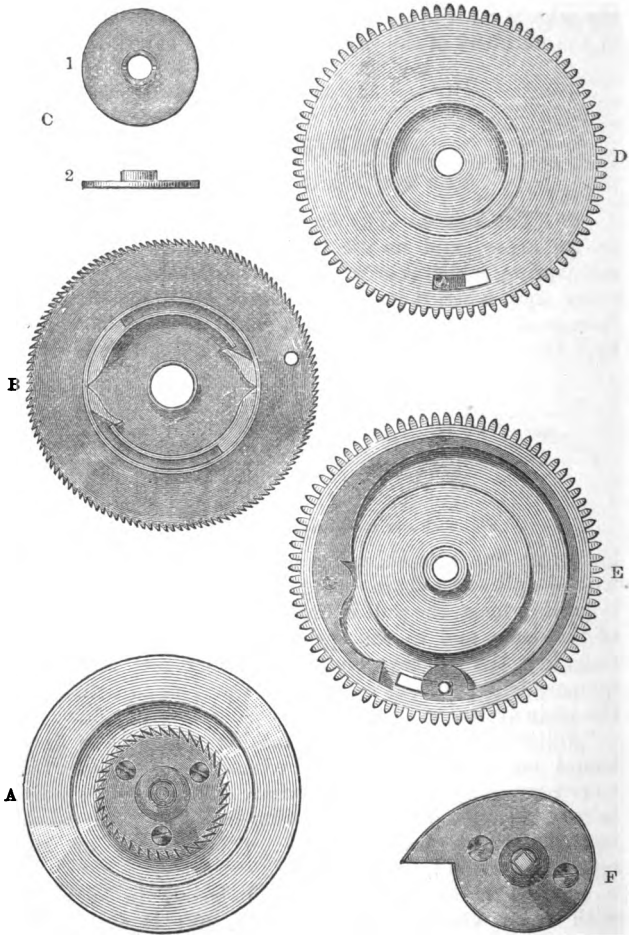

Fig. 5.—The Fusee.

Fig. 5 represents the separate parts of the fusee. A is the bottom of the fusee cone, which is hollowed out to receive the ratchet wheel, shown in position. This ratchet wheel and the fusee arbor are formed in one piece in three-quarter plate watches, and are fixed to the cone with three screws, the heads of which are sunk in the wheel; the arbor goes right through the cone and terminates in the winding square (shown at F); the ratchet wheel is nearly flush with the outer edge of the fusee brass. B is a thin steel wheel with clicks and springs projecting from its surface that act into the teeth of the ratchet wheel A. The use of these clicks is to permit the fusee to turn one way when the chain is wound on to it, and to prevent it from turning the other way without the steel and great wheels when the chain pulls it in that direction; the ratchet teeth of this wheel are cut in the contrary direction to those on the wheel at A. D and E are back and front views of the great wheel; E shows the maintaining-power spring let into a groove in the wheel, one end of which is fixed to the wheel by a pin going through, while the other end is free to move the distance of the slot; the pin in the free end of the spring projects, one end into the slot shown in D and E, and the other end into the hole in the ratchet wheel B, thus preventing these two wheels from moving more than the distance of the length of the slot independent of one another. Both the wheels are fitted to move freely on the fusee arbor and are kept in their places by the collet shown at C, 1 and 2, in plan and elevation, which is fixed by a pin which passes through its pipe and the fusee arbor. A click, called the fusee detent, pivoted into the frame of the watch is kept in contact with the teeth of the wheel B, by a weak spring screwed to the pillar plate; when the force of the mainspring (which must always be stronger than the maintaining-power spring) is exerted and draws the fusee in the direction of the barrel, it will carry the steel wheel and the end of the maintaining-power spring to the end of the slot

in the great wheel; the great wheel cannot move, from its teeth engaging with the centre pinion, and the steel wheel is held where the mainspring has drawn it by the click or detent. If the power of the mainspring is taken off by winding, the maintaining-power spring will exert sufficient force on the great wheel to keep the watch or chronometer going for a few minutes (more or less, according to the length of the slot in which the pin at the end of it acts). F is the upper end of the fusee, showing a steel cap fixed to the brass cone with two screws, the projecting hook of which stops the winding of the watch at the proper time, namely, when the chain is all wound round the fusee. The barrel arbor has a square cut on it, to which is fitted a small ratchet wheel on the dial side of the pillar plate, and a click (screwed to the plate fitting into the teeth of this wheel) prevents the arbor and wheel from turning when it is screwed down; this click and ratchet wheel are used only for setting the spring up sufficiently to get an adjustment of the mainspring; when the spring is adjusted, the click is screwed down, and the barrel arbor remains stationary.

The fusee (Figs. 5, 6) has four-and-a-quarter turns on it, which allows of the barrel turning three times on its arbor, and with a great wheel of 84 and a pinion of 12 the watch will go for thirty hours, giving six hours' grace in the case of irregular winding. The large end of the fusee should have a diameter double that of the smaller, and the cone should be slightly concave. There are some very complicated formulæ for calculating the proper shape of the fusee, but as the form must necessarily alter with the number of turns of the spiral cut upon it, and as the mainspring may be more or less taper, no rule can be stated for this that would serve any useful purpose; a fusee of the form given will, however, be adjustable. The larger end of the fusee and the barrel should be of the same diameter as the rim of the great wheel, the teeth projecting from the fusee about as much as does the chain from the barrel, and both should be as large as

possible, as the larger they are in diameter the greater will be the power in proportion to the size of the watch.

46. **Fusee Stop.** —The usual stop to a fusee watch is a straight piece of steel fitted to a stud in the top plate, placed so that the end of it will just catch the projecting hook of the fusee-cap when in the same plane; it is kept free of the hook by a weak spring underneath it until the chain comes on the last turn of the fusee, when it presses the stop close to the plate, and the hook catches it.

This stop is a very good one, where there is room for it and it is well and carefully made, but in common watches it is seldom well made, and in very flat and full-plate watches there is not sufficient room for it, and its failure to act is often the cause of chains breaking. A much better stop is the solid one which is made in one piece, since instead of the blade rising at an angle, as the stop described does, it is raised and lowered parallel to the plate, thus giving more freedom to the fusee hook to pass, and, as there is no stud required, it occupies less room. It is fixed to the plate with two screws, the space between the screws forming the spring; the screw at the bend has a shoulder, and the hole in the blade fits loosely on the plain part of the screw, the head of the screw being just far enough from the plate to allow the stop to rise the required height to free the fusee hook; the spring may be made very thin, as there is no pressure on it. The end of the stop should be flat, or sloped a little outwards, so that with any undue strain the hook would press it against the plate, and it should be planted opposite the fusee arbor, the blade forming a right angle with the face of the fusee hook when in contact with it. If the blade is left too long, as it often is, the hook pushes it away, and if too short, pulls it towards the centre of the fusee, thus frequently passing it and breaking the chain. This stop is seldom applied, and never (where it is most wanted) to full-plate watches. It certainly ought to be more easily made, and therefore cheaper, than the common one if it were universally adopted, as it

could be stamped out of sheet steel the required shape and thickness.

There is another very good fusee stop, formed of a straight piece of steel filed thin to act as a spring, with a step or hook near the outer end that catches the fusee hook when the chain, acting on the extreme end, presses it down. This stop has a great advantage over the others, inasmuch as, instead of the fusee hook pressing on the end and pushing it towards its attachment to the plate, it catches the stop or hook and pulls it from its attachment; but it can only be employed when the chain is acting on the inside of the fusee, with a different arrangement of the calibre, commonly called a left-handed movement, *i.e.*, a movement where the usual positions of the barrel and fusee are reversed. It has been pointed out by writers on this subject (as I have before remarked, in treating of Movements), from Mudge to Sir E. Beckett, that the usual arrangement in English watches is wrong, and the Swiss evidently acted upon this knowledge, as most of their pocket chronometers (and pocket chronometers are the only Swiss watches possessing a fusee) have the chain on the inside of the fusee. If the chain acts on the opposite side of the fusee to the centre pinion, the pressure on the fusee pivots is the sum of the force of the mainspring on the fusee and of the great wheel on the pinion; but if the chain acts on the same side as the pinion it will only be the difference. The friction on the fusee pivots would therefore be greater in the former case than in the latter, and it is well known that the wear is greater in the fusee holes than in those of the rest of the train. In reference to this, Sir E. Beckett says:—"I know no reason why the common arrangement should be adhered to, except that it is the common one, which is generally considered reason enough for anything bad." There is much force, and, when applied to watchmaking, much truth in this, otherwise the full-plate watch would not have kept its supreme position until it has, with other matters of the

same sort, greatly injured the English watch trade. There are reasons, however, why this caliber has not been adopted. The finisher had acquired from practice great facility in running in the fusee and barrel in the usual way; making and adjusting the stop is more difficult when the chain is acting inside than when outside the fusee, and manufacturers did not see sufficient practical advantage in the change to make them pay more for it. The top fusee and bottom centre wheel holes and pivots are more liable to wear than any other parts of the watch; but the fusee holes are generally left too short, and dust or damp is introduced by the key or through the keyhole in the case; the bottom centre hole is likewise nearly always too short, and the pivot close to the pressure of the great wheel; the cannon pinion also is usually fitted so close to the plate that it draws the oil from the centre hole. But although the centre holes are well known to be subject to wear, they are seldom jewelled, even in the best watches; no good watch should be made without jewelled centre holes.

47. **Mainsprings.**—The employment of the mainspring as a prime mover for clocks and watches, although dating from the sixteenth century, has undergone little or no change in the manner of its application; its action is unique. I know of no other mechanical combination wherein a spring is required to maintain such sustained and uniform resistance for so long a period, nor in which it is expected to last so long.

As the manner in which the power is given out from the spring is second only in importance, in the construction of a timekeeper, to the controlling and regulating of the vibrations of the balance by the balance spring, the action of the mainspring requires, and has received, a good deal of consideration from watchmakers, especially those of France and Switzerland. In England also, when watches were made with verge escapements, the adjustment of the mainspring was considered of paramount importance, as the time of the watch varied so much

with that escapement with the least irregularity in the motive force, but when the lever escapement became universal, the English watchmaker troubled himself very little about adjusting the mainspring.

When the number of revolutions the great wheel was to make was determined (and they were generally nearly the same), every one concerned knew the form of fusee that would give an approximate adjustment with the aid of the barrel ratchet, and there was never any question or discussion as to the best manner of attaching the spring to the barrel. Every finisher knew how to hook in a spring in the best possible manner (and could generally do it, as it was the first piece of work he was taught to do as an apprentice), that is, a square hook on the spring fitting a corresponding hole in the edge of the barrel. In common watches these hooks were frequently made too large, which necessitated a large hole in the barrel, and weakened it very much at that part, and as these watches were gilded for show, and made soft so as to get a surface on the gilding, if a strong spring broke in such a barrel it would bulge it out at this weakest part, when either a new cover would have to be made or the old one be hammered out. This weakening of the barrel has been urged as a reason for adopting the foreign method of attaching the spring to the barrel by means of a pin in the side of the barrel and a hole in the spring, the advocates of this method either confusing or misunderstanding the different actions of a spring in a barrel, where any adjustment of its strength is sought for in the mode of its attachment to the barrel, and one actuating a train through a fusee.

A mainspring to act with a fusee is tapered from the outer end (the adjustment of the fusee enabling this to be done), so that when the outer end of the spring is fixed rigidly to the barrel, the coils of the spring when being wound round the arbor will fall away from the outer circumference separately, and wind and unwind on and off the arbor without the friction produced by the

coils rubbing one another, as they do with a straight spring and a loose attachment at the barrel.

Notwithstanding the growing disposition amongst modern English watchmakers to praise and adopt the going barrel, all the old French watchmakers and writers on the subject agreed as to the superiority of the fusee and the tapered mainspring with a rigid attachment to the barrel.

M. Saunier, in his treatise, quotes various authors, and enumerates experiments on this subject made by eminent French watchmakers. He says that A. Breguet and U. Jurgensen made marine chronometers with large going barrels and long springs of convenient form, of which only a few coils, selected by test, were ever called into action. The spring used by Jurgensen in one of his marine chronometers without a fusee, which had a remarkably good rate, was very weak, and had a length of 3·5 metres (11·5 ft.). Its (the chronometer's) price was very high, and the maker did not care to make others at even that price. He says: "It is essential that great care be exercised in ascertaining the progressive force and in the construction of such a spring, in order that it may give a uniform pull and always keep the several coils apart, for otherwise it is impossible to avoid resistance caused by adhesion and clustering." He says again that it is difficult to apply these long springs to pocket chronometers, because they cannot, from want of space, be of the requisite length and breadth; and that M. H. Robert has obtained a sufficient approximation to uniformity in the force of a spring of ten or eleven turns in his going barrel chronometers, utilising 3·5 turns from the "point of winding up, when the last turn was out of contact with the barrel rim." Considering the great ease with which an ordinary marine chronometer mainspring with a fusee can be perfectly adjusted, without any chance of resistance from adhesion or clustering, it seems strange that these men, who were so well acquainted with the superiority of the fusee, should have

devoted so much time to experiments with going barrel chronometers, and it is a question whether this persistence in trying to supersede the fusee adjustment in marine chronometers has not lost this branch of the trade to France.

Now that the introduction of keyless watches has brought the going barrel into common use, it would be foolish of English watchmakers to apply it only with a grudging acquiescence, or to make no effort to improve its construction. At the same time, it is well to remember that a great many experiments have been made by the French watchmakers referred to in a variety of ways, the outcome of which seems that a spring of moderate length set up about a turn, with something to spare, will have an easier action in the barrel, and be freer from adhesion and clustering than a spring of greater length, although the longer spring may give a more uniform pull if set up several turns. It is also worthy of notice that all the best Swiss watches have a rigid attachment of the mainspring to the barrel, as, although the hook is in the barrel, and the usual oblong hole in the spring, the attachment is made rigid by the pivoted brace or post, which contributes greatly to the free action of the spring, and prevents to some extent the friction and adhesion from the coils rubbing against one another. The Swiss, by using a differently-arranged movement, obtain a wider mainspring than could be got in an English movement of the same thickness, and as there is no room to spare in pocket watches, it is of great importance to make use of all the barrel space available.

48. **Number of Turns in the Spring.**—To prescribe a certain number of turns of spring for a barrel would be quite misleading, as the number of turns of the spring in the barrel is no guide to the number of turns the barrel will make by the winding or unwinding of the spring on or off the arbor.

M. Saunier quotes the following theorems from a work on mainsprings by Messrs. Rozé (father and son),

which was published in Volume II. of the "Revue Chronometrique":—

(1) A mainspring in the act of uncoiling in its barrel always gives a number of turns equal to the difference between the number of coils in the up and down position. He says:—"Thus if 17 be the number of coils when the spring is run down, and 25 the number when against the arbor, the number of turns in the uncoiling will be 8, or the difference between 17 and 25."

(2) With a given barrel spring and arbor, in order that the number of turns may be a maximum, it is necessary that the length of the spring be such that the occupied part of the barrel (exclusive of that filled by the arbor) shall be equal to the unoccupied part; in other words, the surface covered by the spring when up or down must be equal to the uncovered surface of the barrel bottom.

A good deal of stress is laid by various writers on the necessity of a proper-sized barrel arbor; but if the arbor used is too small, as it often is in fusee watches, when too thick a spring is used, the mainspring will break at the eye, unless it is made very soft at that part, when the only effect will be that it will bend round the arbor, acting as a larger arbor and reducing the acting length of the spring.

The size of arbor found to answer best, allowing of the necessary length of spring and preventing too small a circle at the eye, is one-third the inside diameter of the barrel; the arbor should be snailed, so that when the spring is wound on to it, it will take a spiral form, and not be distorted, as it would be by winding it on a circular arbor.

In order to diminish the friction of the coils in a going barrel, mainsprings have been made recently with the outer coil curved backwards, so that the spring when unconstrained takes a form something like the letter S. This spring is made with a view to the better separation of the coils upon the spring's unwinding, as the outer

coils will fall more readily away from the inner ones towards the edge of the barrel when the spring is bent in this way than when it is straight or of the usual form. It is said to be freer in the barrel, but liable to break.

49. **Spring Attachments.** — There have been so many inventions for equalising the pull of the spring by the mode of attachment to the barrel, that a few of them may be noted, although, as already stated, they have been all abandoned for the rigid attachment in the best work by the Swiss, who have had the most interest hitherto in adopting any improvement applicable to the going barrel. The Americans are inventing over again and patenting some of the obsolete French inventions. A mainspring attachment attributed by M. Saunier to M. Philippe, but claimed by a dozen others, is obtained by bending the end of the spring backwards in the form of a hook, and forming four nicks in the inner edge of the barrel, in which this hook will catch and hold, unless unusual strain is put upon the winding arbor, when the hook would slip from the nick and catch in the next one. It is claimed for this plan that no stop work is required, but it is really quite useless. In the first place, the rim of the barrel would require to be two or three times the usual thickness to admit of the nicks, or grooves, being cut deep enough, while the bent-over end of the spring standing out from the side of the barrel would take up three or four turns of spring room. Secondly, after the spring hook had been drawn across the nicks a few times (if it did not break before), it would not hold in any one of them. And yet this attachment is quoted as one of the improvements in modern watches.

Another mode of attachment, accredited by Saunier likewise to M. Philippe, but having many other claimants, is that of having an elastic ring sprung into the barrel, the end of the spring proper being riveted to it at one end. This ring fits the barrel sufficiently tightly to resist being moved during the winding of the

spring, but when the spring is fully wound, and the outer coil being pulled towards the centre of the barrel, it will give sufficiently to prevent the spring from being broken. This method offers attractions in the shape of rigid attachment, getting rid of stop work, &c., but is open to the same objection of taking up too much space as the previous one, the spring band being necessarily considerably thicker than the mainspring. An improvement on this invention is that of substituting a piece of mainspring for the spring ring; this piece is riveted on to the end of the mainspring outside it, and running the reverse way, or, as it were, doubled back upon it; at the other end it has a hole which is held by the usual pin in the barrel; when the spring is wound up the piece falls towards the centre, but offers sufficient resistance to the winding to be a substitute for a stop.

But practically there are only two modes of attaching the spring to the barrel that have obtained general approval, namely, the rigid attachment formed by the hook in the mainspring and square hole in the barrel, and the loose or flexible attachment of the hook in the barrel and the hole in the end of the spring. The Swiss in all their best watches have converted the latter attachment into a rigid one by the use of the pivoted brace. If there is any reason, apart from it being their ordinary custom, for adopting this way of getting a rigid fixture of the end of the spring, it is that the mainspring could be more easily changed if too weak or too strong, or if the spring were to break, than if the hook were riveted into it, as in the latter case a new hook would require to be made; but the hook in the spring takes up less room, and this mode of attachment is undoubtedly the best.

50. **Going-barrel and Stop Work.**—Fig. 6, A, is a diagram of the ordinary going-barrel and "Geneva" stop work. Its application to all the watches made out of England, and to nearly all the keyless watches made here, renders it familiar to every watchmaker, and any elaborate

description of it is unnecessary; and, as the principle of the action of the mainspring in the barrel has already been discussed, the only feature that need be noticed is the stop work. The stop work shown in the figure is applied to

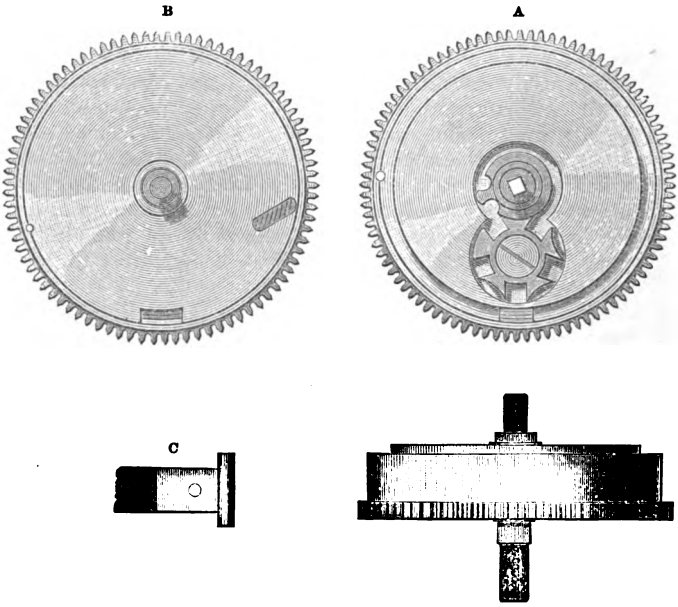

Fig. 6.—A, Ordinary Going Barrel and Stop Work; B, Improved Going Barrel; C, Stop Piece.

nearly all going barrel watches; but this and every form of stop work so applied has the great defect of reducing the height of the barrel, necessitating a narrower, thicker, and shorter spring, and thus increasing its liability to break. There is also the further defect of the stop drawing away the oil from the hole and pivot to which the stop finger is fitted, as, to save room, the finger must be fitted close to the barrel. The Swiss

always fix this stop work on the barrel cover, but some of the Lancashire movements have it on the barrel. This arrangement is bad, for these reasons:—The barrel hole being in the same plane as its teeth, or wheel, there is more friction in that hole than in the hole in the cover, and, therefore, the pivot should be as long as possible and have oil kept to it; the sinks turned out to receive the stop work necessarily weaken the part of the barrel to which it is applied, and render it more liable to be spoilt than the unweakened part, and any injury to the cover is easier remedied than if it occurred to the barrel. (In the event of a barrel being damaged from this cause, it can be rectified by turning out the bottom, snapping a new one into the groove, similar to the one into which the cover is snapped, and riveting over).

With a view principally to remedy these defects of the ordinary stop work, and also to obtain an approximate adjustment of the mainspring, I devised the barrel represented in Fig. 6, B.

Two slots are cut tangentially, as shown in the figure, in the barrel and cover, into which the pivots on the piece C project. The piece C is riveted to the end of the spring with one rivet only, this allowing of its bearing equally on either slot in case they are not exactly parallel to one another, and half the thickness of the pivots is filed away to prevent loss of spring room. When the spring is wound round the arbor the pivots traverse the slots inwards, and, when they reach the bottom, make a strong and most effective stop.

The number of turns the spring is required to make is regulated by the length of the slots; if they are too long the spring will be wound up on itself, and, although the stop will be perfect, the friction of the coils of the spring on each other will be greatly increased (an evil that is not always considered in the going barrel, as in many cases the whole length of the spring is used).

This barrel has the advantage of admitting a wider mainspring and longer pivots; there is nothing to draw

away the oil from the holes, and there is besides a perfect adjustment of the mainspring for nearly four turns.

51. **Mainspring Making.**—From some cause not easily explained, watch mainspring making has almost died out in England, and I should be afraid to say how many of the springs applied to English watches are made in Switzerland. No country has greater facilities for drawing and rolling steel than this, and most of the steel used in Switzerland is English, yet we have allowed a lucrative industry to slip away from us. We have, however, still the monopoly for marine chronometers, and of the best hammered and tapered springs for fusee watches, springs hammered or forged from wire being more elastic than those cut from rolled sheet steel.

The process of making a chronometer spring is so nearly identical with that of making a watch spring that a description of the former will suffice for the two.

These large springs are cut from rolled sheet steel, which must be of the best quality, with a circular cutter; the bench on which they are cut has an adjustable bar, so that the springs may be cut to any required width. The roughness left from the cutter being taken off the edges with a file, the strip of steel is then bound round with binding wire, and wound up into a spiral six or eight inches in diameter (the binding wire keeps the coils separate and the steel from scaling). It is then heated in a close furnace, and, when at a proper heat, dipped into melted tallow or oil; as steel will not all harden at the same temperature, a good deal of the art of spring-making lies in the careful hardening.

When the spring is removed from the tallow and the wire taken off, it is hard and very much distorted; it is then drawn over an iron case, heated with gas until it becomes of a deep straw colour, and in this first process of tempering it is brought nearly straight, and soft enough for further manipulation. It is now fixed in a frame, somewhat resembling the frame of a large bow saw; this frame moves along a bench on rollers, and

has a screw at one end for drawing the spring tight as the heat to which it is subjected lengthens it. The spring is again placed over the hot iron case, and when the part at the end that is first submitted to the heat becomes of a light blue colour, it is drawn gradually over it until it is all of the same colour and temper; the rollers on the frame enable the operator to move it quickly if the colour is coming too rapidly. The spring is kept quite tight in the frame during the process of tempering, and when it cools all the kinks have disappeared, and it is quite flat and straight. It is next fixed up in a frame similar to the last, having one end fixed and the other adjustable, and worked smooth with lead clams and coarse emery. After all the marks have been removed, it is tapered by working the clams backwards and forwards, beginning close to one end of the spring, and increasing the length worked upon by an inch each time the clams are drawn to and fro, the operator gauging the thickness as he proceeds, and finishing with wooden clams and fine emery.

Notwithstanding the constant gauging of the spring during the process of tapering, the amount of tapering and its accuracy are tested at the last by bending the spring into double loops from end to end, and seeing that these loops grow gradually larger or smaller, according to the end first tested: this testing requires skill and judgment. When the spring is finished with the fine emery, the eye is made at the thin end, and a small part of its length softened for bending round the barrel arbor (if it were left as hard as the rest of the spring, it would break by being bent into so small a circle); it is then wound up two or three times, and if it forms a perfect spiral, it is passed, but if any of the coils are closer together than the rest, it is rejected, as this shows it is not of uniform temper throughout.

Straight springs are so much easier made than tapered ones that they can be made much cheaper, and it can only be want of enterprise on our part that

prevents us from supplying other countries with mainsprings as we have formerly done, instead of importing the greater part of what we use.

CHAPTER VII.

CHRONOMETER AND WATCH MAKING.

52. **Chronometer Finishing.**—The principles which govern the action of wheels and pinions are all that an intelligent workman needs to understand — apart from the practical details — in order to be able to finish well; but the proper application of these practical details can only be indicated in a book, and it requires long experience at the bench before a man becomes a good finisher.

Chronometer finishing is only good clockmaking, but the work is so much finer that clockmakers rarely take to that or any other branch of chronometer making.

The barrel and fusee of the chronometer being large work, what remains for the finisher to do to them is usually done in a small foot-lathe, or in a hand-lathe, or throw. The pinions are sometimes pivoted and finished in a throw, but for the most part this work is done in the turns, *there being no machine that will enable one to turn an object as true as it can be turned on its own centres, rotated with a bow in the common turns, especially if it be a thin-tempered arbor.*

There is a little to do to the barrel when it comes from the movement maker, namely, to smooth the pivots, and free the barrel on the arbor and let it into the frame, and hook in the mainspring.

53. **Hooking in the Spring.**—The springs have always been until recently fixed to the barrel, with a square hook riveted in the spring and fitting a corresponding hole in the barrel; but lately the Swiss mode of a hook

in the barrel and a hole in the spring has been adopted, because it is easier done, and if a new mainspring is required there is no new hook to be made.

Considering the necessity for perfect adjustment of the mainspring of a ship's chronometer, and the trouble taken by a good mainspring maker to taper the spring in order that the inner coils, when being wound round the barrel arbor, may fall away from the outer ones without friction, the advantages of a firm attachment of its outer end to the barrel will be at once recognised. This hook is better than the barrel hook usually found in watches, there being more room for it, and it being turned of the form of the head of a screw for wood or of a button; but whatever its form, it is not so good as the hook in the spring, and it takes up a portion of the spring room, since it must project beyond the thickness of the spring which it holds. (For making a barrel hook, *see* page 89.)

54. **Planting the Wheels.**—After freeing the great and maintaining-power wheels with regard to one another, and smoothing the holes in them and the arbor, upon which they will be found very tight, the spiral should be cut for receiving the chain, the number of turns to be cut on it to make the chronometer go the required number of hours being ascertained, as directed at page 60. The pin holes through the arbor and the collet that keeps the maintaining-power and great wheels in their places should be broached together, and the arbor and holes smoothed from burrs. The wheels may be freed by either turning a little off the face of the collet or out of the centre of the great wheel, until they move easily with a pin fitted in. The wheels should move easily, and yet have no side play or shake; as if the collet is pinned on so that they are stiff to move, the chronometer is hard to wind, and the maintaining-power spring is prevented from acting. The centre wheel is pivoted first: it must be planted in the centre of the frame, and just be free of the pillar plate. The fusee should be planted so that

the great wheel makes rather a deep depth with the centre pinion, and is free of the barrel.

55. **Stop and Spring.**—The stop which catches the fusee hook when the chain is all wound on should next be filed up and adjusted, the pin-hole through the stop and stud being broached with the stop held close to the plate at the point. When a pin is fitted, the back of the stop can be filed away until it just rises sufficiently from the plate to allow the hook to pass between its point and the plate; it must then be filed to length. When the stop forms a right angle with the face of the hook, it will be the right length, the face being radial to the fusee centre; the hole in the blade of the stop must be broached a little larger than the pin, in order to allow the stop to rise from the plate.

The stop spring must not be strong, and should only touch the plate where it is screwed to it, and a notch is filed in the stop near the blade to give the spring freedom. A part of the stop where the chain presses has to be thinned so that it may not be pressed in too soon. This part may be roughly got by twisting the cord of a small bow once round the smaller end of the fusee, putting the fusee top pivot in its place, and holding the bow so that the cord is parallel to the plate, and in the direction of the edge of the barrel from which the chain would be unwound. The amount of thinning it may require can be done without putting the barrel and fusee into the frame. When the mainspring has been adjusted, the action of the stop can be tested, and any correction may be made before it is finished.

56. **Adjusting-rod.**—The adjusting-rod shown in Fig. 7 is somewhat different from the ordinary one used by finishers for testing the pull of mainsprings, &c. In addition to the sliding weight, the jaws which grip the squares can also be shifted, being fixed at any required distance along the rod by means of a thumb-screw at the back. This enables it to be used for almost any spring, from the weakest to the strongest.

After adjusting the mainspring, the adjusting-rod should be put on the fusee square before the weight is shifted, and the great wheel held in the hand in such a position that the weight will draw the pin in the maintaining spring to the other end of the slot in the wheel through which it projects. If the weight of the rod does not draw the pin forward, the maintaining-

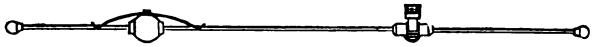

Fig. 7.—Adjusting-rod.

power spring is too strong, and must be weakened; the mainspring must be strong enough to draw the maintaining power spring as far as the slot will let it go when the power of the spring is pulling on the fusee. A brass cap is let on to the fusee square, to keep dirt from getting into the hole when the piece is wound, and a pipe is generally screwed on to the plate round the winding square, and let through the bottom of the brass box, to keep dirt and damp from the chronometer.

57. **Finishing the Wheels and Pinions.**—The pillar plate has a circle cut out, and a bar screwed over it on the dial side to receive the bottom and seconds pivots of the third and fourth wheels; this arrangement enables the third wheel to be run under the centre wheel, and prevents the seconds pivot from being too long. The fourth pinion must be pivoted close to the bar, and must have a deep hollow cut in its face, to prevent the oil from being drawn from the pivot; the third wheel must be kept free of the centre wheel, and the pinion must have a hollow cut in its back or rivet, as must also the centre pinion.

All the wheels have to be polished. If they are true on the sides, they are first stoned with a smooth Water-of-Ayr stone on a cork until they are quite flat, and then placed in the turns and polished circularly with an ivory polisher, and a paste made by rubbing two pieces of

blue-stone together with a very little oil, and finished with a slip of boxwood and a few rubs with a piece of willow at the last; if the willow is used for too long a time, the arms of the wheels will be rounded.

Although polishing the wheels is the usual way of finishing them, stoning them very flat and smooth and electro-gilding them will give them a much nicer appearance, and keep the brass from tarnishing.

The pinions and arbors are highly polished; some finishers burnish the arbors, but a high polish can be got very quickly with a zinc polisher and diamantine.

The faces of the third and fourth pinions are finished with the ordinary facing tool, but as the large pivot on the centre arbor precludes the use of such a tool, it is faced square down to the arbor; the pinion is placed in the turns, and small turns that fit into the rest holder carry a roller mounted on an arbor; this roller is brought to bear against the face of the pinion, and the pinion is rotated backwards and forwards with a bow. The roller first used is steel, to bring up the face flat and square, after which soft metal rollers are used for finishing.

58. **Jewelling.** — The third and fourth holes are usually jewelled, although some makers object to jewel these holes, as the pivots are apt to become black; but if jewelling is indispensable in the escapement holes, it is also necessary here, and if the holes are good and well made the pivots will not wear.

The fourth wheel hole in the upper plate should be jewelled with an endstone, although it is seldom done, as a pivot of equal size is stronger if conical than one with a square shoulder, and the pivot will run with less friction on the end than on its shoulder. The oil also keeps better in a covered hole.

59. **Spotting the Plates.**—The spotting of the plates is a branch in itself; it is done in an engine resembling a wheel-cutting engine; after the plates are polished with rotten-stone, the plate or piece that is to be spotted being fixed to the dividing plate, a small hollow ivory point

charged with oil-stone dust or emery and oil is attached to a jambed arm. This point is brought into contact with the plate while it is rotating, the plate being shifted after each spot, and circular or geometrical patterns marked on it as arranged on the dividing plate. The steel work and the screws are blued, but it is not thought safe to harden the large screws, since, if a screw head broke off and stopped the chronometer, the result might be serious.

60. **Watch-finishing.**—The various operations that have hitherto been combined under the name of watch-finishing I have to some extent treated of separately, for I think that, if ever watchmaking resume its former proportions in England, some more economical and rational system must be pursued in manufacturing than that now in vogue. No better way could be devised of making a young man a thoroughly practical watchmaker than by apprenticing him to a finisher first, and afterwards to an escapement-maker. But the time occupied in waiting for work that must be done by others — such as jewelling, engraving, gilding, &c.— the diversity of the work—from pivoting and planting the barrel and fusee, to making and planting the stud and index, &c.—and the tools and appliances necessary to enable one man to do these things in the best manner, are so considerable that it has not been possible for even the most competent workman to obtain sufficient remuneration for the time and labour expended on the best work; while men with less ability and principle have had a constant temptation to shirk such parts of the work as were most troublesome to them, or in which bad workmanship was more difficult to detect. The practice hitherto has been for the finisher to take the movement after the dial and escapement were made, and to return it to the manufacturer gilt, proceeding in the following manner:—

61. **Testing the Wheels.**—The first work is to get the wheels ready for gilding, and it frequently happens, in movements that are not of the best quality, that they

require to be thinned; in that case they should be placed in the frame and the space for them noted. I have often found finishers thinning wheels from habit when there was no occasion for their doing so.

The pinion arbors must be shortened and the pinions and wheels got true; the wheels must be made perfectly true on the sides, square and flat (first on a cork with a piece of Water-of-Ayr stone and afterwards rubbed circularly in the turns); and hollows must be cut in the wheels to permit of the rivets of the pinions being polished without touching them when they are gilt. It is sometimes better to make the lower pivot on the centre wheel arbor before the wheels are gilt, as then the barrel and fusee can be worked into their places.

62. **Running in the Wheels.**—The centre pinion has an arbor fitted into it projecting at each end, far enough to put a ferrule on it; a deep hollow is cut in the back of the pinion, and the pivot made as close to the wheel as possible. The hole in the plate should be well chamfered and a turned stopping of good brass put into it, the stopping being allowed to project on the dial side of the plate; the centre wheel should always be kept a little below the plane of the plate, to give it sufficient freedom from the barrel and great wheel; the fusee and balance being put into the frame, it will be seen if there is sufficient freedom between them. If the balance is a plain one, and is quite free of the fusee brass, the chain will be free also, but a compensation balance should have more room allowed it, as the rim may be bent after it is cut by careless handling; if the movement is right in this respect, the fusee can be pivoted and planted. The barrel hole in the pillar plate need not be stopped if the barrel is a proper height in the frame, and a sufficient distance from the third wheel arbor and the great wheel. The upper fusee pivot should be as long as possible. Movement makers do not leave it long, as it is a common practice to cut and polish a hollow in the fusee arbor;

but there is not space for this with a long pivot, as there is a hollow cut in the reverse side of this shoulder in the ratchet wheel to admit the short projecting pipe of the great wheel. Since, then, there is not thickness enough for a hollow on both sides and space for a long pivot, it is much better to leave the shoulder square and turn the fusee piece sloping from the hole to make the bearing light, or take a large corner off the shoulder, polishing the slant, giving the required bearing, as with other square pivots. It is customary to polish the inner and outer edges of the fusee cap before snailing it. The inside edge, after being turned to the required angle, is polished with a tool, similar in principle to an ordinary pinion facing tool, but turned or filed to fit the angle or edge of the cap; the outer edge is more difficult to do; it is always polished, even in common watches, but there is no reason why it should be, as it is not always ornamental. The outer edge being sloped off in the turns till its edge comes to the plane of the top part of the brass cone, is polished with a broad polisher, one side of which resting on the brass, enables the edge of the cap to be polished quite flat; the back of the hook is filed to a corresponding edge and polished on a cork. Some finishers take out the arbor and polish it all upon a cork.

The pin-hole in the collet and arbor should be broached until it is sound with the fusee together, and, if the wheel and collet are too thin to bear reducing to give the necessary freedom, a piece of tissue paper placed between them while the hole is broached will ensure it. This freedom of the great wheel is a point generally neglected, and is of much more importance than the polishing of the edges of the cap.

63. **The Top Plate.**—The depth of the great wheel and centre pinion being determined and marked, and the stopping for the fusee hole put in, the top plate should be turned out for the fusee piece in the following manner:—

Place the pillar plate in the mandrel with the centre in the fusee hole, and peg the hole (pegging the hole is the only method by which a perfect upright can be obtained in the mandrel, and is the usual way of getting it). Take a long peg and cut a fine point to it, and, withdrawing the mandrel centre, place the point of the peg loosely in the hole. Then by bringing the turning rest up to about an inch from the plate, level with the hole, resting the body of the peg on it, and gently turning the mandrel, it can be seen whether the hole is in the centre exactly; if it is not, the end of the peg projecting over the rest will move up and down, when the dogs must be slightly loosened, and the plate tapped gently until the hole is in the centre.

When the hole is right, tighten the dogs, screw on the top plate, and turn out the place for the fusee piece. An exactly similar course must be followed in putting in the holes in the top plate for the centre wheel and barrel; but the upright of the centre wheel is of so much importance that a hollow stopping should be put in, and the inside of the hole turned out with a fine cutter in the slide rest of the mandrel, to nearly the size of the pivot. It may not be requisite with a good mandrel to peg the hole before turning out the place for the fusee piece, but it is quite necessary to do so when turning out the pivot hole in the piece itself.

64. **The Barrel Arbor.**—If the pivots of the barrel arbor are the proper shape (which they generally are now in the best movements, and certainly ought to be), the pivots and holes will only require smoothing, and the barrel freeing on the arbor. Instead of adopting the usual course of turning away the bosses in the barrel and cover to reduce the rubbing surfaces, a deep hollow should be turned, and a shoulder formed on each side of the arbor of a sufficient width, and the bosses should be left on the brass as large as possible. It has not been the practice to snail the barrel arbors of fusee watches, as there was no trouble with the adjust-

ment of the mainspring, English springs being tapered and generally filed thin at the eye, but the arbors should be snailed (and they probably will be now by the movement maker), and the hook should not project beyond the thickness of the spring.

65. **Hooking in the Spring.**—A spring of the proper length and strength being fitted to the barrel, it should be hooked in as follows :—With the spring in the barrel, drill a small hole in the barrel a little nearer to the bottom than to the cover, so that it may be in the centre of the inside of the rim, and within half-an-inch of the end of the spring; the drill will mark the spring. Remove the spring from the barrel, and broach the hole to nearly the size it is intended to leave it at an angle of 45° ; file this hole with a small square file, having a safe edge, until it is oblong, and, when it is of the required size, finish it with a drift. If the hole is in the middle and has not been drawn to either side of the barrel by filing it, the end of the spring can be softened, as far only as the hole for the hook, until it is a light blue colour, but it should not be made softer; the hole is drilled by gripping the spring against a piece of wood or brass in a small hand-vice.

The hook should never exceed one-third the width of the spring, a larger hook unnecessarily weakening the barrel and holding no better. A piece of rectangular steel is fitted to the hole in the barrel, and a mark is scored on it with a sharp point along the inside of the barrel. This mark will give the angle at which the shoulder should be made; if the angle is less than 45°, the hook will probably draw out if the spring is fully wound round the arbor. The pivot on the hook is often made by filing, but it is much better and quicker to make it with a cutter. As the strain comes on the back of the hook, the pivot should be kept as near the front as possible. The cutter is a piece of steel with a hole drilled in it and fine teeth cut on its face; it may either be a piece of wire with a ferrule on it, or it may be fitted

to a drill stock. In the latter case the hole should be broached from the back to enable the cutter to free itself, but as the pivot need not be long, this is not imperative; the cutter should be slightly convex on the face to ensure a firm seat for the hook when riveted. A point or centre being left on the steel which is to form the hook, a few strokes of the bow will form the pivot, and the angle of the hook when the pivot is made should correspond with that of the hole in the barrel. The pivot is fitted by broaching and chamfering the hole in the spring, and riveted by gripping the steel in a blunt pair of nippers and screwing them up in a vice; the rivet should be left long, and made with a few strokes of a rather heavy hammer. There is a good deal of strain on this hook, and for that reason the attempt (generally a failure) at using a hook a second time should never be made.

About three-eighths of an inch of the spring should be left beyond the hook, and this end must be filed away to a knife edge, the thinning to commence at the hook. If the spring is left the full thickness at the end and an unusual strain is put upon it, it will break across the hole where it is weakest, or the hook will draw out. Most watch jobbers know this, and generally make the end of the spring so soft that it bends, and all the advantage of a rigid attachment is lost.

If the spring is fitted to a new barrel, the hook can be filed down from the outside of the barrel, and finished on an arbor in the turns; if, however, the barrel is gilt or polished, the hook must be finished before it is finally put into the barrel; it is brought to height by trying it in the hole from the outside, and filed down and finished on a cork; the hook must not project beyond the barrel. If there is any difficulty found in getting the height of the hook by trying it from the outside, the thickness of the rim and mainspring can be measured separately by a *douzième* gauge; the thickness of the two together will be the thickness of the mainspring and hook. This

is the best way of hooking in the mainspring of a fusee watch, but there are various reasons for departing from it in going barrel watches, one of the principal being that a flexible attachment of the spring to the barrel to some extent affords an adjustment; the pull of the inner coils is not affected by the attachment, but, when the outer coil is called into action, it falls away from the barrel with less resistance when the attachment is flexible than when it is rigid. To satisfy myself of this, I made the following experiment, which I think conclusively proves my assertion to be correct. Having carefully adjusted the mainspring of a "two-day" marine chronometer which had a hook in the barrel, I removed the hook in the barrel and substituted the square hook in the spring. Upon again trying the adjustment, I found that to obtain an adjustment the spring had to be set up considerably more than it was before, and the weight of the adjusting rod altered, as the pull of the spring was greater throughout.

Again, there is greater uncertainty in fitting a spring of the proper strength to a going barrel than there is to a barrel with the fusee, in consequence of the inequality of the arcs of vibration of the balance during the unwinding of the spring of the former; for if the balance vibrates over a turn when the watch is nearly down, it will be liable to bank with the least external motion when fully wound, especially if the lever escapement be a good one; and it is much less convenient to change a spring with a hook in it, than one that has only a square hole punched out of the end.

As the springs are now nearly always fixed in going barrels with a steel hook in the barrel, some system should be observed in making them. In English watches the greater part of the mainspring is brought into action, and, as no pivoted brace is used, the hooks must be made more secure, otherwise the spring will either slip off or pull the hook with it.

If a small screw plate is made with two or three

holes of the sizes required, drilled and tapped at an angle of 45°, the pin or hook can be tapped, and the end of the screw filed up into a hook of the required form, and to the proper height; or it can be tapped in an ordinary screw plate, and afterwards screwed into the slanting hole and finished, but it is necessary first to screw the pin into the barrel, and mark for the inside of the hook close to the rim, so that, when the hook is in the right position, the screw part of it will be flush with the inside of the barrel and quite tight.

If this hook is properly formed and at a sufficient angle, the spring will not draw off, even if it be left very little higher than the thickness of the spring; the end of the spring in this case is made softer than if it had a rigid attachment. The hole should be oblong and perfectly square at the outer end, bevelled off from the inside to take a good hold of the hook, and there must not be any length of spring left beyond the hole but what is required for strength, as, if there is, it acts as a lever and pushes the spring off the hook, even if thinned. On the other hand, if a round hole be made in the spring, the strain draws the middle of the outer circumference of the hole to that of the hook, and unless the two correspond or are exactly in the middle of the rim, the spring will press either the cover or the bottom of the barrel, and add considerably to the jerking action of the spring, so familiar to watchmakers in the winding and unwinding.

Another, and better, although more difficult way of hooking in the spring is to screw the hook in from the inside of the barrel. The chief trouble attached to this method is in getting the hook square to the barrel rim when screwed home to the shoulder; it must be tried first and marked for the square, a little being allowed for it at the last to be screwed home very tight, as in marking for dog screws. In addition to the other reasons for not hooking in the spring as in fusee watches, the

extra width of the great wheel teeth attached to the barrel has to be considered, which would necessitate in most cases this hook being placed at one side of the spring instead of in the centre of it.

66. **Adjusting the Chain.**—When the spring has been hooked in, the fusee piece made and planted, and the fusee and barrel run in, the chain should be attached and the stop work filed up and adjusted. Care must be taken that the hole in the barrel for the chain-hook be placed so that the chain will be just free of the plane of the top plate; the hole may be drilled anywhere in the barrel, provided a little is filed out of the cover to free the end of the hook should it project into the sink, which it generally does. If the chain is too far from the plate, the second turn will probably ride on the top of the first, hence the necessity of keeping it as close to the plate as possible, and to avoid this riding of the chain it must not be left too long. The barrel hook should come to the outer edge of the top plate when the chain is wound up.

The hollow in the stop may be filed out to nearly its proper thinness (see chronometer finishing, page 82), but in no case should this process be considered sufficient.

If watch finishers, or even examiners, had thoroughly understood the uses of the adjusting rod and freely used it, half the faults that have been found with the fusee watch would have been avoided. It is not that the actual adjustment of the mainspring is of such importance at this stage, but, with the fusee and barrel only in the frame, any fault that may afterwards give trouble can be seen and removed. If the chain does not lie square on its edge on the barrel, it should not be used, as no filing will make it do so; it ought to lead freely into the grooves of the fusee, and not touch the stop the turn before the final one, and, when it does touch it, it should bring it close to the top plate as the hook of the fusee cap comes to it; at all other times the stop should be quite free of the hook, and not rise high enough for

the end of it to come in contact with the chain on the fusee.

If the sinks for the barrel and fusee in the top plate are turned deep, it is sometimes difficult to prevent the chain from riding on the barrel hook; to avoid this, accordingly these sinks must not be turned too deep. Too much endshake to the barrel or fusee will also cause this to occur, and the stop to act improperly, therefore there should be only just freedom before gilding.

The detent should be pivoted without endshake, ratcheting in the steel wheel and just free of the great wheel teeth.

67. **Pivoting.** — When the wheels are gilt, the pinion leaves are polished out with a piece of hard wood and red stuff, as the gilding discolours them. The centre wheel, having already the hole in the pillar plate, should have the top pivot made below the top plate and a stopping put into the plate to meet the shoulder; by so doing, a longer pivot is got, and the square for setting the hands can be sunk in the plate. This is more necessary in a keyless watch, the case coming so close to the plate that scarcely any square can be left; in some cases, no square is left, and the piece that carries the cannon pinion has to be pushed out to remove the pinion. If the centre pinion is too long, it occasionally comes in contact with the steel wheel of the fusee; in that case the pinion should be shortened before the top pivot is made.

As the pivot holes in the bar for the third and fourth wheels are generally jewelled, the bar need not be very thick, and should be reduced from the inside to get as much room for the wheels as possible. The fourth wheel pinion must be shortened until the wheel rests on the pillar plate, and the pinions, having previously been polished, may be pivoted; the fourth wheel should have the freedom divided between the plate and the escape wheel, a deep hollow being first cut in the face of the pinion, as the arbor beyond the pinion is so short, that

without this hollow the pinion would draw the oil from the pivot hole. If there is much freedom in the sink for the third wheel, the back shoulder of the arbor may be left longer, as it is only necessary to keep the third wheel free of the centre wheel. The pivots of the third wheel should be of equal thickness; the seconds pivot of the fourth should be thicker than the top pivot, and if it is made straight, should have the end tapered afterwards, as it is not possible to fit a hand on it otherwise that will not get loose in a very short time. Making nice pivots has always been what the workman was most proud of, and, as it is only after much practice that a large square shoulder can be made, these shoulders have often been left too large because it was thought they looked handsome, and when pivots were often made small to prevent friction, the shoulders were left large enough to cause three times the loss of power that even the largest pivots would have done. If the holes are jewelled, the pivot shoulders can hardly be made too small; for, although the jewel holes are sometimes sloped off to prevent the adhesion caused by the contact of the flat surfaces, the precaution is of little use if the oil becomes thick, as the oil adheres to the rounded face of the hole much in the same way as if it were flat.

When the fourth pinion is pivoted and ready for running in, the depth with the escape pinion can be got in the depthing tool, and marked on the dial side of the bar; this depth must be taken from the escape wheel jewel hole with the endstone off. When the score is made on the bar the dial should be put on and the seconds hole marked so that the seconds pivot may come in the centre of the hole, or as near to it as possible. Some finishers put in the bottom holes only; but it is not possible to be quite sure of the correctness of a depth until the wheels are run into the frame; therefore a hole should be put in the top plate for the fourth upper pivot, and the depths and the heights be verified.

The third wheel depths are pitched last, that with the fourth pinion being ascertained and marked first, and afterwards that of the third pinion with the centre wheel.

68. **Motion Work.**—The branch of watchmaking called motion making has all but disappeared, and the greatest advocates of division of labour will scarcely regret it. It was the old custom to have the motion work—*i.e.*, the cannon pinion, minute and hour wheels, and set-hand piece—partly made and the wheels planted, before the watch was finished or the centre wheel run in. These wheels, &c., were usually inferior to the wheels in the rest of the watch, and the principle was bad, as there were always more leaves in the pinion of the minute wheel than there were in the cannon pinion. The finisher is now, however, or ought to be, supplied with the motion wheels, and when the centre wheel is planted, a proper depth can be made with the cannon pinion and the minute wheel. The stopping for the centre wheel is left projecting and should now be turned in the mandrel into a pipe; the pivot should project well through the hole, and the cannon pinion, having a greater number of leaves than the minute wheel pinion, will be large enough to have a square sink turned out of its face, to free the pipe left projecting. This is the finisher's work, and can only be well done at this stage, as leaving it for the examiner to do after the pinion is polished and the frame gilt, is doing the work twice over and doing it badly.

The minute wheel depth with the cannon pinion should be as deep as is consistent with perfect freedom, as should also that of the hour wheel and minute wheel pinion, in order to prevent the hour hand from having too much shake.

As there is seldom height enough for the minute wheel stud to have a shoulder—which it should have where practicable—the plate should not be turned, but a small boss be left on the bottom of the wheel to prevent all of it from touching the plate.

The hour wheel should be broached to the required size, and the cannon pinion fitted to it before the wheel is got true on the sides and finished, as, if the wheel is opened to fit the pinion, it fits badly and it is scarcely possible to keep it true. The body of the cannon pinion is usually left too large, necessitating a large centre to the hour hand. This is unsightly, and has been complained of as causing a want of symmetry in the appearance of English watches. The minute wheel stud and pinion, and the boss of the hour wheel should be freed from the dial before they are finished, for nothing could be worse than the prevailing practice of thinning and finishing the motion wheels before they are let into their places, and leaving the freeing and fitting to be done afterwards.

When the third and fourth wheels have been pivoted, before sending the frame to be jewelled, a circle, the size of the balance, should be marked on the top plate, as a guide to the jeweller, as in case the balance comes near the fourth hole, the jewelling must be kept small; otherwise, in turning the edge of the plate to free the balance, the setting will be cut into. It is sometimes better to pivot the fourth pinion a good way into the plate, and obtain freedom for the balance, by running it under the jewel hole. All this is of course avoided in a movement of a correct caliber, or in a half-plate movement where the fourth wheel is run in a cock under the balance, this arrangement securing the advantage of permitting the fourth wheel being planted so that a larger seconds piece could be got in the dial. Since, in this case the hole in the cock is directly under the balance, it should have an endstone, to prevent particles or small hairs that may be attracted by the oil in the hole from coming in contact with the balance; when the endstone is used, the pivot should be conical, and may therefore be made smaller; but I see no reason why this hole should not always have an endstone where there is room for it.

69. **Screws.**—A finisher must feel that he is not

making the best use of his time in polishing and blueing screws; they are, consequently, very badly done (a lad or girl accustomed to the work would do them better and much quicker). There is, besides, seldom as much care taken in hardening and tempering them as there should be; the screws are made too hot before hardening, and a scale brought on the steel that is not always removed before blueing them; in the case of jewel screws, the scale thus left on them is frequently fatal to the taps in the holes. The large screws should be hardened in a small copper box, or in anything that is not large and heavy and will not prevent them from cooling quickly, and that will exclude the air. If they are hardened at the right temperature, there will be no scale on them and no necessity for polishing the taps; the temper should be drawn in oil. The jewel screws are too small for this treatment; if a piece of brass wire is hammered flat and left the thickness of the length of the screw taps, and a number of holes be drilled and tapped in it as close together as the heads of the screws will permit, half a dozen of them can be screwed into the wire and hardened at the same time, and afterwards tempered by blazing in oil before removing them from the wire; and, if the threads have been covered during the process of hardening, they will be quite free from scale and the screws be ready for polishing. If any scale is left on the large screws it should be removed by gripping the screw head in the Swiss screw tool, and running a thin screw head-slitting file through the bottom of the thread. A very good way of polishing the taps of screws for best work, is to split a piece of soft wood, making it into claws, charge the slit with red stuff, and by placing the screw in it and pressing it together in the vice, the screw can be polished very quickly by working it backwards and forwards with a screw-driver.

70. **Suggestions as to Finishing.**—I think at this stage the finisher's work should be completed, and that making and planting the stud and index, springing and examining, and whatever else remains

to be done to the watch, should constitute a separate branch of watchmaking. It would form an intelligible and consistent branch, would not be too long, and time would not be lost, as it is with the finisher, in waiting for the engraving and gilding of one watch at a time. This arrangement would also do away with the trouble and annoyance caused to the springer when he finds the room prescribed for the spring too much or too little, the index pins drilled in the wrong place, and the hole in the stud in such a position that it must be broached (and to broach it now he must soften it, or adopt some more objectionable means of getting the stud hole for the spring concentric with the curb pins). Index making is already a separate branch, and studs are shaped and made ready for planting by what may be termed machinery, but even should the examiner, or whatever name the operator may go by, prefer making them himself, there would be a great saving in making a dozen or more at a time, and keeping them, ready for planting, as is now done by some springers of the best watches; and making, or at least finishing, the index would be, logically, part of the springer's work.

If the wheels were run in and finished, the barrel and fusee work completed, and the stop work and maintaining-power spring and detent done correctly at once, they would not require to be done over again; and if the motion work were planted and finished and free of the dial, there would be little of the ordinary examining to do, so that fitting the watch in the case, fitting the hands, the stud and index work, and springing and examining, would form an important branch of watchmaking. The practice and experience gained would enable the workman to do the work very much better than it has been done under the system hitherto practised, and to do it quicker and consequently cheaper. The watch could be sprung and examined before it was gilt, and the index, stud, &c., finished while the engraving and gilding were being done. There is an obvious advantage in examining

the watch before it is gilt, as gilding has the effect of covering many defects of workmanship, and the greatest advantage this system would have over the usual one would be that of having one person responsible for the correctness of the work throughout.

71. **Applying the balance Spring.**—But as I am not very sanguine that this suggestion will be immediately adopted or acted upon, I will proceed to describe what I consider the best method of applying the ordinary spring. The size of the spring is the first consideration, and this should not be left to accident; it should depend on the length required, which depends in its turn on the closeness of the coils of the spring. As a general rule, half the diameter of the balance is a good size for the spring, but if the coils are very close, it should be a little less.

If the diameter is marked on the projecting ear of the balance cock that carries the stud, and a notch is cut in it for the spur of the stud, three-fourths of it outside the mark, the spur may be fitted. It should be carefully fitted, without shake, and exactly opposite the balance hole; if it is either too far back or too far forward, the hole for the spring will stand at an angle across it. The stud may be fixed with either a conical or square-headed screw, and it should be cut away to allow of its removal from the cock without taking the screw out, and the screw should be left long enough to permit of this being done easily.

When the stud is screwed into its place, and the end of the spur freed from the arms of the balance, the circle fixing the size of the spring can be marked on it. If the spring collet has been made by the escapement-maker, as it should be, a pivot broach can be put into the hole in it for the spring, and the broach, lying parallel to the balance cock, will indicate the height on the spur where the hole must be drilled; the hole should be drilled with a small drill. As the spring is not circular but spiral, the holes for the curb pins must be

drilled inside the circle drawn for the hole in the stud, but how much, depends on the closeness of the coils of the spring, since the farther apart the coils are the more the spirals diverge from the circle, and care should be taken not to place the curb pins too far out, which is often the case, and is a much worse fault than having them too near the centre.

When the hole in the stud is drilled and broached tangential to the spring, if the depthing tool is adjusted so that the point of the centre will mark the inside edge of the hole, and a mark is made on the index at the same distance, the curb pins can be drilled on each side of this mark.

A surer way than this, although giving a little more trouble at first, is to pin a spring in the stud, first moving the spring through the stud hole until the proper size of the spring is indicated by its centre coming over the balance hole; it will be seen if the stud hole is in the right direction, and if not, it can be broached until it is so at this stage with perfect accuracy.

When the eye of the spring is concentric with the balance hole, if the index is placed in the middle of the balance cock, a mark can be made with a very fine point on each side of the outer coil of the spring for the index pins. These should be very small, especially the inside one, and, if the spring has close coils, a portion of its thickness should be filed away, to free the second coil of the spring; bending the spring for this purpose should not be resorted to if it can be avoided. The pins should be close together, allowing the spring freedom, but as little play as possible, and only just free of the balance arms to prevent the second coil of the spring from getting between them.

The horn of the index should be at such angle that, when the index is pushed over to "slow," it will come close to the stud, as the shorter the spring is between the stud and the index pins, the better the watch will go. If the spring is to be a Breguet, the overcoil will be a

segment of a circle, and the pin holes can be marked for with certainty. As the spring occupies only half the hole in the stud, three-fourths of the hole should be outside the point of the depthing tool when it is adjusted to mark the place the spring will occupy on the index, and the holes can be drilled on each side of the mark.

It is well to have a proper freedom for the spring between the pins without bending them, and, as the wire of which Breguet springs are made is thicker than that used for flat springs, the holes should be drilled a little farther apart. If the stud of a Breguet sprung watch is not perfectly immovable, and the spring free between the curb pins in every position of the index, no good rate can be obtained from the watch, and there will be no certainty of the effect which moving the index will have upon its time.

It has become the custom of the Swiss to put Breguet springs to watches that are quite unworthy of them, where no adjustment of any kind is attempted, and the studs and indexes are so badly fitted that these watches must give the worst results to the wearers of them and the greatest trouble to the watch jobbers; the studs are made, for the most part, in the shape used in the best English watches. Now if Breguet springs are to be applied to these watches in this cheap and slovenly manner, the old-fashioned Swiss stud (Fig. 8), that slipped into a notch in the cock, with a head on it, and was kept in its place by a small cap fixed with two screws to the cock, would be a great improvement on the imitation English one. Indeed, this stud is a very good one, as, when the watch is set going, the play of the spring between the index pins fixes the position of the stud, when all that is necessary is to tighten the screws, and the spring will be in the middle of the index pins.

Fig. 8.—Old-fashioned Swiss Stud.

CHAPTER VIII.

WATCH EXAMINING.

72. **Watch Examining.**—Watch examining has been a growing branch of watch manufacturing, but with a better system a change should be brought about in this department. Competition in price compelled movement makers to do as little as possible to the movements, and the same cause and the fact of his branch being too long, prevented the finisher from doing a good deal of the work at the proper time, so that putting things right that should have been right at first, but were only half done,—in fact, doing a large portion of the work over again by the examiner—came to cost from a third to half the price of finishing the watch. But although a great deal of the work done by the examiner ought not to be done by him, there must still be careful examination and, when necessary, correction of every part of a watch, before it is placed in the hands of the wearer; however, although a rearrangement of the work is desirable, I must treat it here as I find it.

If the watch to be examined has a dome case, and is fitted to it as directed on page 109, the examiner has nothing more to do with that, as the fitting is complete. But most English watches have the double bottom case, and are fixed in with a bolt and joint, the bolt and joint, with the motion work, having been made by the motion maker, and the bolt polished, &c., by the finisher. As the finisher has probably had no opportunity of trying the movement in the case, the bolt may not shut in properly, or it may be easily released : it must therefore be seen to, and the joint should be broached out with the bizzle on, and a pin fitted tightly enough to keep the bizzle and movement from dropping back if either or both are raised

from the case. The pillar plate should be laid on a piece of plate-glass or other flat surface, to ascertain if it has been bent in the gilding; if it has, it must be got flat, otherwise the pillars will not be upright, and will stick in the holes in the top plate. If the shakes are found to be excessive, this may be due to the gilding having thrown up an edge on the pillars, which prevents the top plate from going down to its proper bearings. In all the best work the finisher fits the cannon pinion to the hour wheel, but this is not the general practice, which is to just let the hour wheel on to the extreme end of the pinion, and not to open the pinion to the set-hand piece, leaving the fitting of these pieces to the examiner. The set-hand piece should be reduced until it fits the centre pinion easily; and before the cannon pinion is let on to its place, it should have the square sink turned out to free the centre wheel stopping, when it should be broached to fit the set-hand piece tightly when in its place.

73. **Fitting the Hands.**—If the body of the cannon pinion will not bear turning in fitting it to the hour wheel, the hour wheel should be opened in the mandrel, as it cannot be kept true by opening the hole in the fingers. Fitting the hands to a watch deserves more care and attention than are generally given to it. The way hands are fitted to English watches is bad in principle. The pipe of the hour wheel is left too long, and that of the minute hand too short, and when the end-shake of the hour hand is adjusted, as it usually is, by the boss on the hour wheel and the dial, the end-shake of the centre wheel affects it, sometimes giving it too much and bending the hour hand by its catching the minute hand either in setting the hands or in the going of the watch. In fitting the hands, the examiner should fit the glass, if to a hunting case, as high as the case will admit, ascertain the space available by placing a piece of bees-wax on the dial and pressing the glass down on it, and turn the cannon pinion until it projects from the dial the height of the bees-wax;

the hour wheel pipe should rise just perceptibly above the dial, and the end-shake of the hour hand be adjusted by the pipe of the minute hand and that of the hour wheel.

If done in this way, the end-shake of the centre wheel will not affect that of the hour hand, which will be always the same, and may be very little, and the minute hand will have a sufficiently long and secure fitting; the hour wheel pipe is always long enough to make the fitting of the hour hand perfectly safe, except where a very thin gold dial is used. The haphazard method of fitting the hands without measuring the room in the case is a very bad one; they are generally fitted too low, and, with a badly fitting hour wheel, are constantly catching, and so stopping the watch.

As with the hour wheel, the pinion should also be fitted to the minute hand, and not the hand opened to fit the pinion; when the hand is fitted, a little red stuff can be placed on the ball, and the pinion lowered until the red stuff is quite free of the glass, when the end-shake of the centre wheel is pushed towards it; the ball of the hands and the ends of the pinion and set-hand piece are then ready for polishing: this part of the work is usually well done. A very convenient tool for doing it is the Swiss screw-head tool.

74. **Attaching the Dial.**—The pin holes in the dial feet should be drilled with a very small drill, in such a direction that the pins will not come in the way of anything, and will be easily got at; they should not be drilled below the surface of the plate, but broached until the pin touches it. If the hole should be a little below the surface, it is better to lengthen the copper foot by squeezing it with a pair of blunt nippers until it is above the plate than to leave it in such a position that no pin can stop in.

There could not be anything much worse than the manner in which the dials have been attached to common English watches, the holes for the dial feet being placed in the most awkward positions, the pin holes drilled so very much too large that they were constantly bursting

out at one side, and so far under the plate, that the pins must be bent to go into them and pushed in so tightly to prevent them from falling out, that the dials were and are frequently broken by the mere process of pinning them on after cleaning the watch. There is no better way of attaching a dial to a watch than by pins through the feet if it is properly done; but two dial feet are better than three, if one of the three is in such a position that a pin cannot be got into it.

75. **General Revision.**—The mainspring should be removed from the barrel and the barrel freed on its arbor, if it requires a little end-shake, as it usually does. The freedom should be taken from whichever side of the barrel is nearest the frame: *i.e.*, if the barrel should be nearer the top than the pillar plate, the boss of the cover should be thinned to get the inside freedom, and *vice versa;* the mainspring can then be put in and adjusted. With the adjusting rod on the fusee square, any fault in the action of the stop work will be seen, and it will also be seen whether or not the chain leads properly on to the fusee. The spring should be set up two or three teeth beyond where it makes an adjustment, as it will give a little, and the set-up be marked on the plate and barrel arbor by a couple of small dots. When the fusee is taken out of the frame, the adjusting rod should be put on the square, and held horizontally with the great wheel in the left hand; if the weight of the rod, which is a measure of the strength of the mainspring, draws the maintaining spring to the end of the notch cut in the great wheel, the maintaining spring will be weak enough, but if not, it must be weakened until it does so. The maintaining power and great wheels must not be pinned on too tightly to the fusee, for if this be so, or if the maintaining spring be too strong, the maintaining power will not act; and the examiner should see to this when adjusting the fusee, and also see that the stop acts properly. (*See* p. 93.) The holes for the set-hand and winding squares must be made in the case, or, if they have been drilled, opened to

the required size, and the squares reduced to the proper length. Polishing the ends of the squares was at one time thought to be of importance, as it gave an appearance of finish to the watch, and often very bad watches had the ends of the squares polished flat; there is, however, no necessity for doing this even in the best work. If the end of the winding square is left flat, it is difficult to put a key on that fits it, and it soon gets scratched; nor should it be rounded, like some of the squares to the best Swiss watches, since that makes the square too short. The square should be shortened gradually, until a little red stuff on its end does not touch the bottom of the case (the set-hand square may be a little lower), and should be polished either in an English or Swiss screw-head tool; the latter is more convenient for this purpose, especially for the set-hand square; the end should be just a little rounded and the narrow corners be taken off with a very old and smooth pivot file.

The wheels should be put into the frame separately and the end and side shakes of each noted; the depths of the great wheel and centre pinion, and centre pinion and third wheel can be seen without putting on the top plate; the fourth and escape depths must be tried with the frame together, as they are more important and less easily seen, and, if doubts be entertained as to their correctness, they should be put in the depthing tool and examined. In going barrel watches, the examiner has less work; he should see that the spring is properly free in the barrel, and of a proper length, and not set up so far that it is in danger of pulling the hook away every time it is wound up; the set-square must be kept quite free of the bottom, and it should be fitted very well to the centre pinion, but loose, and, before putting the watch together, a slight dent should be made in the stem with a sharp-pointed punch; this will give it a kind of spring tightness in the pinion which will permit of the hands being easily set and at the same time keep the minute hand sufficiently rigid.

If the stem is fitted tightly, by polishing, into the pinion to keep the minute hand from being too easily moved, there will be a great danger of it sticking fast; it should always have a little oil put to it to prevent what is termed firing. It will save a little labour, and be a good deal better in principle, to revert to the old plan of a solid centre pinion for keyless watches; by snapping or springing the cannon pinion on the solid arbor, setting the hands is much more easily accomplished, and there is another advantage in having the centre pinion's pivots smaller and stronger.

76. **Fixing Movement in Case.**—As the largest portion of English watches are made with what are called "double-bottom" cases, *i.e.*, cases having the inner cover or bottom made solid with the middle, the only way of fixing in the movement that will permit of it being opened to view the works is with a joint and bolt; but there are so many objections to this arrangement that it is difficult to account for its continuance. In the first place the edge of the pillar plate of the watch is cut through, which weakens it so much that it often gets bent in the gilding; then, the glass bizzle must be opened before the movement can be seen, and, as the bizzle opens at right angles to the cover in a hunting watch it always marks it. The necessity of making the bizzle open easily, and making a joint on it, prevents it from fitting closely, and from excluding dust and damp from the dial and movement; and there is also the danger of an inexperienced person pulling off the hands and breaking the dial in opening this bizzle and lifting the movement from the case.

The English case-makers are principally to blame for the preponderance of double-bottom cases, for, being unaccustomed to make dome cases, they charge one-fourth more for the fashion (*i.e.*, the making) of them than for the making of double-bottom cases; the Swiss, on the contrary, reverse this order, and charge more for the latter.

The case-makers must not, however, have all the blame, since, had the manufacturers chosen, they might have altered the system, as the price of the bolt and joint would have gone some way to pay the extra cost of the dome case. But other reasons may be found in the fact that a dome case requires more gold in the middle and bands, and the foolish law that prevents the English watchmaker from fixing, even by a pin, a dome to a case of any other metal than gold. Thus law and custom have prevailed against common sense and economy, and I believe that full plate watches, with double-bottom cases, are responsible to some extent for the decline of watch-making in England. It is therefore to be hoped that some means may speedily be found of superseding both, although habit has so much influence that when dome cases are used the movement is often fitted to the case with a pin in the edge of the plate and a small hole in the projecting band of the case, and a joint and pin on the opposite side; even keyless watches being made with a bolt and joint. It is not usual to let the finisher have the case, as it can be sprung and polished, &c., while the watch is being finished, and, if the watch has a dome case, it is necessary to fit the movement to it first. The best way to fix it is with one pin and one screw; two pins and a screw are sometimes used, and this may be done if the edge of the case where the pins go is deep enough to take pins of sufficient strength, but this is seldom the case. A good-sized hole is drilled in the edge of the pillar plate close to the step, and a piece of brass is tapped and screwed into it, projecting a very little beyond the edge of the plate; this piece is filed and the sides of it shaped with a chisel into the form of a wedge, when the position of the dial in the case is marked on the flange of the case which supports the frame, and a square notch is cut in it to receive the thick part of the pin, and prevent the frame from moving round in the case, while the wedge-shaped end of the pin projects underneath it, and prevents the frame from rising from

the case. A mark is then made for a screw on the top plate opposite the wedge, and drilled close enough to the edge of the plate for the head of the screw to come over the band of the case, and a dog-screw (*i.e.*, a screw with a portion of the head cut away) fitted; this screw is screwed into the pillar plate, the body going through a hole in the top plate into which its head is sunk as deeply as the thickness of the band of the case will admit of. The sink in the plate must be a very little below that in the band, and the screw should have a shoulder to rest on the pillar plate while the head grips the band of the case sufficiently tightly to prevent any movement of the frame in the case. I have found this the most convenient and simple way of fitting a movement to a case, as, if it is properly done, the movement can be removed or put in the case with the greatest ease. In putting it into the case, if the movement is moved round the wedge will drop into the notch, and, by turning the screw half round, the movement is secured. Care must be taken to find a place for the screw that will be free from the other parts of the watch; in ordinary fusee movements, between the figures seven and eight on the dial will be the best place for the pin, and there will be room for the screw opposite.

CHAPTER IX.

JEWELLING WATCHES.

77. **Objections to Jewelling.**—Jewelling the holes for watch pivots has been practised for nearly two centuries; it was invented by Nicholas Facio, a native of Geneva. He came to London in 1700, and a few years later commenced the business of watchmaking and watch jewelling in partnership with the brothers De Beaufré. The watchmakers of Paris, to whom he first applied not

appreciating his invention, gave him no encouragement, and the London watchmakers do not appear to have treated him with much greater liberality, as the Clockmakers' Company opposed his application for a patent, although, presumably on the strength of his invention, he had been admitted as a member of the Royal Society. Watchmakers of a century and a half ago were considered of more importance than they are at present, and many of them were members of that learned body).

Notwithstanding any jealousy the watchmakers had of Facio, his invention was speedily adopted both here and on the Continent. The jewelling was for the most part confined to the holes of the escapement, probably in consequence of its cost, but there must have been a prejudice against jewelling watches at an early date, which has not yet quite disappeared, because of the tendency of certain sorts of stones to blacken the pivots when the watch has gone for some time and the oil turned viscid. However, there are no watches made now that have not at least the balance staff holes jewelled, and I do not think there are any watchmakers that will not admit that the holes of the escapement would in all cases be better for being jewelled; although I have heard men argue that the third and fourth wheel holes of a watch would be better to be of good brass than to be jewelled. I am sure there are thousands of English watches that would have gone longer and cost less to repair, if they had been jewelled in a few more holes. The Swiss, on the other hand, jewel their very worst watches in as many holes as possible, and do it so badly that brass holes would in many cases be preferable.

78. **Stones for Jewelling.**—The stones used for jewelling watches are the ruby, sapphire, chrysolite, and garnet; a thin rose diamond is generally put as an endstone to the balance cock of English watches, but only as an ornament, and that is the only diamond ever used in the jewelling of a watch. There is an uncharitable

belief that watchmakers sometimes change the jewels in watches for stones of inferior value, but there is no foundation for the calumny, and the time spent in making the exchange would certainly exceed the value of the best holes.

There are great varieties of all these stones, so that it cannot be said that a ruby is best for a hole unless it is the right sort of ruby, and colour is not always a guide as to the quality; the oriental ruby is the best, being the hardest and having the greatest specific gravity; it should always be used for the best watches. Sapphire is usually used for the holes of marine chronometers. Rubies that have a deep red colour are prized and used by the Swiss, while in England the milky stone is preferred as being harder; it is also thought that, in consequence of the colouring matter, the red stones blacken the pivots more than the light-coloured ones.

My own experience is that, if the stone is hard and well polished, the colour is not of much consequence; since, although the pivot becomes black, it does not cut, and the discoloration is easily removed with a peg and a little fine red stuff.

The quality of the oil has much to do with the blackening of the pivots, and those which have the greatest friction will become discoloured first. In ordinary watches jewelled in the third and fourth wheel holes, the lower third wheel pivot will be the blackest, it having the greatest friction, from being so close to the action of the centre wheel in the pinion; and if the centre holes be jewelled, the bottom pivot will generally be found more discoloured than the top one from the same cause. But there are so many reasons in favour of good jewel holes that every good watch should have all the train holes jewelled except those of the fusee, which are expensive, and liable to be broken with the pressure in winding the watch. Garnet is largely used for jewelling common watches, especially in the pallets to lever escapements; it is of the same hardness as chrysolite, but not so brittle. These pallets are soon cut, a few years' wear pitting the

rubbing face of the stone on which the escape-wheel tooth drops, in which case the only remedy is new pallets, as to polish out the pits would spoil the escapement. Chrysolite would answer better for pallet stones, only it is not so like ruby as garnet is. Garnet is also used for the impulse pins of lever escapements, but the least violent external motion to the watch will break off the pin, if the balance be a heavy one, and the cost of replacing it will be many times the difference between the original price of a ruby and a garnet pin.

The test of the hardness of precious stones is in the working of them; their specific gravity can be ascertained by weighing them in the air and when suspended in water, and by dividing their weight in the air by the difference; the water for this purpose must be distilled.

Watch jewelling in England has hitherto been divided into two branches only; namely, hole-making, and jewelling; the hole-maker flatting and drilling the stone, and turning it true on the edge and faces; and the jeweller fitting the hole to the pivot, shaping and polishing it, and setting it in the plate. In Switzerland there is a great division of labour in preparing and fitting the holes to watches. Jewelling would seem to be as far removed from escapement-making as two branches of a trade could be, but the Swiss escapement-maker is served with the jewel holes along with the other materials for the escapement, and sets them himself. This practice would be useful to watch jobbers going to India or the colonies, but watch jewelling is so much of a specialty, and requires such great practice to do it well, that one is surprised at the combination of two such parts surviving in Switzerland.

79. **Hole Making.**—The English process of making a hole is to take the rough stone, about the size of a small pea, and hold it against the face of a plate or mill fixed in the lathe and rotated rapidly; the mill is of soft iron charged with diamond powder. When one side of the stone is flatted, the other side is held against the mill

until the stone is brought to the required thickness; it is then cemented on to a chuck, turned true on the face and edge with a piece of black diamond fixed in a handle, and centred with a small splint of the same, and drilled to half the length of the hole; the stone is then reversed on the chuck, the face turned true, and, if it is the front of the hole, the chamfer or cup is turned out of the centre, and the hole met. From first to last this seems a very slow process; and flatting the stones is a very dirty one, as the mill must be kept supplied with plenty of water. In fact, I believe it is the identical method pursued by Facio, the inventor. When the hole is a large one, the process of drilling with a diamond point is well enough, and it is acknowledged that holes made in this way cannot be beaten; but, without adopting all the Swiss system, which has some drawbacks, I think ours ought to be greatly improved.

The Swiss flatten the stones on a large horizontal mill driven at a very high rate of speed, generally by a turbine, or by steam power. The stones are not presented singly to the mill, but are cemented on to a block, and held against it in quantities of some dozens at a time; when the stones are sufficiently reduced on one side, they are reversed, and the other side ground until they are the required thickness. It is evident that this operation can be done for a tithe of what it would cost to have them flattened by the old process.

The uncertainty of getting the sides parallel to one another by the above method, however, prevents the holes from being drilled perpendicular to one of these sides. If they were drilled one at a time this could be done, but the stones are pushed half a dozen or more into a kind of tube or holder, which is fixed on the rest of the lathe in a line with the drill in the chuck. This drill, instead of being a diamond, is a piece of drawn steel wire; it goes through a great many stones at one time, and is charged with diamond powder, and, instead of a man or woman drilling one hole and then stopping the machine,

he or she has to attend to six machines, each drilling six holes at one operation, and the faces of the holes not being parallel to one another, the holes are seldom perpendicular to either side of the stones. If they are much out it is not possible by any process of opening to make true holes, especially if they are a good length; but this process of flatting and drilling is so expeditious, and consequently cheap, that jewelling an extra pair of holes makes little or no difference in the price of a Swiss watch, and jewelling every hole is now the rule with them, although, as before stated, they are not always as good as brass ones. They are made very thin, are very badly polished, and of such material that they are so easily broken that few common Swiss watches are without a cracked jewel hole or two. Some years ago there was quite an industry in London of finishing these holes for America,—so it was believed,—but now I understand the factories in the States make their own holes, and there is certainly no reason why we should not take a leaf out of the Swiss book, and amend our system without altogether adopting theirs. A Swiss jewel hole maker informs me that thirty years ago, before the drilling in quantities was adopted, a woman or lad could drill a hundred flatted stones in a day, and the holes in these stones were required to be perfectly perpendicular to one side of the stone, although the rate of speed that a boy or woman could drive a foot-lathe would be much too slow for a revolving drill; but this process would seem a great improvement on ours of setting up a stone in a lathe, and meeting a hole small enough for a staff pivot.

80. **Jewelling.**—When the jeweller first gets the frame to jewel the holes for the escapement, he has nothing to do with fitting the pivots, as they are not then made, but he should have a size given him, and his care should be to make use of all the thickness of the plates for holes with end-stones, to make the sinks in which the settings rest quite square, and the shoulders of the settings to coincide with the sinks. The setting itself should

have some substance in it, and not be turned away so thin that any extra pressure on the end-stone would bend it in and reduce the end-shake, or until it is impossible to lift the hole, unless it is done as the jeweller does it, on the end of a damp finger. Some watchmakers object to large stones on the ground that the colouring matter being in a greater body than in a small one, it will blacken the pivot more; but then, on the other hand, it should be remembered that a small stone means necessarily a weak one, and a large stone has other good qualities as well as strength. When there are end-stones, the oil chamfer is cut at such an angle in a thick stone that the pivots drop into their places without trouble, and without the risk of injuring them in putting the watch together—a thing that is so often happening to the pivots of the balance staff, especially where the balance is a heavy one. Some jewellers make a double chamfer to the holes, but I see no use in that.

There has been considerable difference of opinion amongst watchmakers as to the best shape of a hole: some have advocated a long straight hole with a pivot, largest at the extreme end to lighten the friction (as shown in Fig. 28); but no person who has had much experience of the going of watches would think of making a balance-staff pivot unnecessarily weak, and of the very form most liable to injury. A jewel hole should not be straight, but rounded from both ends to the middle, so that the rubbing surface shall be small and equal, whatever the amount of end-shake may be; as shown in Fig. 9. This is also the best shape for thorough holes (*i.e.*, holes without end-stones), although they are seldom made so. English jewellers have persistently used screws with too small heads and too large taps for fixing jewel holes with endstones. There is no advantage in a large screw where there are only three or four turns of thread on it, and jewel screws seldom get broken; occasionally half the head comes off if it has been slit down too much.

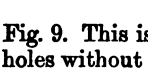

Fig. 9.

The objections to large jewel screws are that, in order that the heads may come over the setting, the holes have to be drilled so close to the sink in the plate that in many instances they burst out, and if, from overheating the screw in hardening, a scale is left, or any other accident happens from carelessness on the part of the examiner, &c., and the thread of the hole is injured, the hole cannot be tapped over again with a larger tap, as could be done should this occur with a small hole. I have seen many watches almost new, that purported to be good ones, with several of the jewel screws overturned and quite useless, and this must have been the case before they left the maker's hands. This is especially the case with the jewelling of escape-cocks that have end-stones. Unless the cocks have ample thickness, and can be properly jewelled, they would in most instances be much better with thorough holes. Jewellers can hardly be blamed for doing the work in this way; they work for watchmakers who ought to know more about the matter than they do. The bodies or taps of the screws should be small, and the head large enough to come over the setting, keeping the body of the screw at such a distance from the sink that, if the screw should be overturned, the hole could be re-tapped, and a larger screw put into it without bursting the hole into the sink.

The bottom holes of the third and fourth wheels are rubbed into the bar, and the holes in the top plate are set in gold or brass settings, which are countersunk into the plate and fixed with two screws, the heads of which are sunk partly into the plate, and partly into the jewel hole setting. In many of the watches made by the Roskells, and other Liverpool makers, the holes were all rubbed into the plates, and they had thorough holes to the escape wheel and pallets. This was an excellent plan, as many of these watches went to South America, and to other parts, where the watchmakers were not very skilled workmen, and, as the holes were all set in this manner, they had no trouble with the jewel screws, and

I have seen these watches after many years' wear very little the worse for the jobbers.

It is now, however, the fashion to put end-stones to the escape-cocks, very often where there is insufficient room for them (and where, in consequence of the want of room, the work would be unsound, even if well done) because end-stones are characteristic of good work, and one sometimes sees an end-stone to the escape-wheel, with the pallet staff in a brass hole. First-class jewelling costs nearly as much in Geneva as it does in London, notwithstanding the superior methods the Swiss have of flatting and drilling the stones, as opening, setting, and polishing the holes require much greater skill and labour than making them. The holes are opened with copper wire and diamond powder, and polished with diamond powder on a hard dog-wood peg, and a hole requires a good deal of labour with the latter before it is properly polished; but, notwithstanding this, if English watch-makers would set about reforming our present system by introducing a greater division of labour, and the Swiss system, in part, of making the holes, sound second-class jewelling might be obtained at much less cost and of a superior quality to what is at present to be got.

81. **Snailing.**—There is the objection to polishing brass surfaces such as great wheels and barrel covers, that, although they are somewhat difficult to polish, they are easily scratched, and that brushing spoils their appearance. The art of spotting such small pieces by hand is not easily acquired, and gilding great wheels and barrels with teeth on them has proved so ruinous to the work by softening the brass that it is rarely resorted to now. Snailing is a very old method of finishing the steel caps of fusees, but since the introduction of keyless work it has come more into use, it being the usual way of finishing the steel winding wheels. The tool usually employed by finishers by which they perform the operation is a very primitive one, mostly consisting of a copper penny driven on to a good-sized arbor, and

termed a mill. The copper is turned away from the side of the roller that is to be used until a thin rim only is left projecting at its outer edge; the roller is fixed in a pair of small turns which are fixed to the rest holder of a larger pair by a projecting shank; the work that is to be snailed is put into the large turns, and the snailing roller brought close to it. One of the runners of the small turns is excentric to the other, and by turning this runner round, the roller is brought into contact with the top side only of the wheel to be snailed; if the faces were parallel to each other, the curves made by the roller coming in contact with the work would be crossed and obliterated by the roller when leaving it, even if the arbor turned only in one direction. This effect is to some extent produced by using a bow, as the up strokes of the bow make curves in a contrary direction to those made by the down strokes, but this confusion of circles does not matter very much, as when it is found that the roller has been in contact with every part of the work, and that it is smooth, the snailing is done with the down strokes only, a long bow being used, and the snailing roller held in the fingers and prevented from turning, while the bow is pushed upwards. Emery and oil mixed with sharp stuff is recommended with the copper roller, but copper is too soft and a bad material for a roller, as the emery sticks in it, and it is difficult to get a smooth surface with it or without deep races in it; the roller should be made of hard brass, and the emery should be washed until it is very fine, and no sharp stuff used with it. Brass wheels, &c., should be stoned free from scratches, and got quite flat on arbors. For this purpose a roller made of hard box-wood should be used with oilstone dust ground as fine as possible, and mixed with oil to the consistency of cream, and the polishing power used sparingly. Sharp stuff and oil gives a bright surface on brass, but polishes too much, leaving the circles undefined. Rollers of any size may be used; one twice the diameter of the object snailed makes a curve that looks very well.

Snailing is a very excellent way of finishing great and motion wheels, and the bottoms and covers of barrels, and if done as directed, they will brush bright and clean without showing any scratches. Although it is in universal use, the tool described is obviously only a makeshift, and the difficulty of using it properly may be judged of from the number of badly-snailed fusee caps one sees, the fusee cap being all that is snailed in ordinary watches.

If polishing should be made a special branch of watch finishing, snailing might be well done without the application of very great skill by using a proper tool, adapted to either a foot-lathe or a hand-lathe, or throw, with a rotary motion, with a screw for the adjustment of the angle of the roller. As the snailing roller will not go right to the centre of a wheel but would leave a lump there, a hollow is usually cut close to the centre and polished; this gives a little variety and relief to the work.

82. **Gilding.**—The art of gilding base metal is of very early origin, and must have been applied to the frames and wheels of the first watches made. I have seen watches by Mudge, Graham, and other early watchmakers, with the gilding so fresh and perfect that, but for the name on them, it would not be possible to tell they were more than a few years old. But the process by which these watches were gilded has almost died out since the advent of electro-gilding, although it is well known that brass gilded in this way will last for centuries. Not ten per cent. of the watches made in England are now gilded by the mercurial process, and none of the Swiss ones.

English watchmakers have been always slow to accept new ideas as such, and have paid less attention to appearance than utility; and, as brass is a better material for watch frames and wheels than any other yet discovered, they have kept to brass, unless in the case of some special order. The Swiss, on the other hand, have

been more energetic and more enterprising in finding a market than their English competitors, and in seeking something novel have adopted a white metal, which they call nickel, for the frames and bars, and a low quality of red gold for the wheels. To heighten the effect, they employ the reddest stones they can find for jewel holes, and set them in red gold, the wheels being polished, and the plates or bars snailed, spotted, and polished in a variety of ways, by means of which a very pleasing contrast is obtained.

This attention to novelty and beauty of appearance has undoubtedly assisted the sale of Swiss watches, especially in the United States, where they imitate the Swiss style, and make all their best watches with white metal frames. But this so-called nickel is only German silver, and although it looks pretty at first and keeps its colour for a time, it gradually gets dim and tarnished, and will not last like the old-fashioned gilding, nor is it so suitable as brass for screw or pivot holes.

As the Swiss no longer make their watches with brass frames and wheels, unless they are for the English market, the gilding has deteriorated there, and they now send their best wheels here to have them gilded.

Mercurial gilding has a rough granulated appearance, from the quantity of gold on the surface and the manner in which it is laid on. When gilding by the electro process was introduced, it was thought desirable to imitate the appearance of the best gilding, but a heavy deposit of gold cannot be left by this process without it running into circles and inequalities in consequence of the holes in the plates, and as electro-gilding is practised because of its cheapness very little gold is left on, and the desired surface is obtained by softening the plates and scratch-brushing, *i.e.*, brushing with a wire brush. There is no reason why electro-gilding should soften the brass if the smooth surface left after the process were not interfered with, but in any case the gold does not adhere to the brass so well as in mercurial gilding.

The Swiss obtain a surface by depositing a thick layer of tin on the plate or other article, scratch-brushing the tin, and gilding afterwards, the gold being so lightly laid on that it would not stand much brushing after gilding; but this method is very unsatisfactory, as, in cleaning the watch a few times, the gold is brushed off the edges of the plates and bars, making the work look worse than if it had never been gilded at all.

The mercurial process is as follows. Take, say, half an ounce of fine gold, and by the application of a little heat, dissolve it in about three ounces of mercury; the work to be gilded must be prepared by placing it for a short time in a solution of dilute nitric acid and mercury. The dissolved gold and mercury are put into a small wash-leather bag, and the mercury squeezed through the pores of the leather until the paste in the bag becomes of the consistency of soft butter. The article to be gilded is then heated a little, and the paste spread over it with a piece of brass used for this purpose, technically called a pencil. The mercury remaining in the paste on the plate is evaporated slowly by heating it; the heat applied should never be greater than the temperature of boiling water, so that the brass be not softened; when the mercury has all been destroyed, the plate is scratch-brushed, with an acid—usually beer—to bring up the colour. Although the process seems simple enough, great skill and experience are necessary in the operator, and there are few good mercurial gilders left.

Polishing the train wheels of watches was much practised in Liverpool, when watchmaking was more of an industry there than at present, and polished wheels looked very well for a time; but, as in the case with polished plates which have sometimes been adopted as a distinguishing feature for pocket chronometers, they soon tarnished.

A very pretty effect is produced by polishing and spotting a plate and electro-gilding it afterwards; the spotting shows through the light coating of gold and

looks very rich, and the gold prevents the plate from tarnishing.

Great pains are occasionally taken to get the gold out of the pivot holes after gilding, but in the case of large holes this is a mistake; a well-gilded hole will last longer than a brass one, and will preserve the oil instead of turning it green as brass always does. The late Mr. Blundell told me he always got the holes of the regulators he made gilded when jewelling was too expensive.

It is a question whether English watchmakers have been wise in disregarding the well-known desire all people have for new things, and in adhering to brass as the principal material for watches, especially as there are now so many alloys of aluminium of various colours and other metals that might be made available for the purpose, which are much better adapted to variation in the mode of finishing than brass is.

CHAPTER X.

VERGE AND HORIZONTAL ESCAPEMENTS.

83. **What is an Escapement?**—The escapement of a watch or clock is that part of the mechanism which controls the speed of the train of wheels, and compels the motive force to exhaust itself uniformly by allowing only one tooth at a time of the last wheel of the train to *escape*. Hence the term. This last wheel is called the escape or 'scape wheel, and is included as part of the escapement, every different kind of escapement having a peculiar escape wheel.

The escapement, then, consists of this wheel, the balance, and all the intermediate pieces. The escapements used in watches are five in number—although many others have been invented from time to time which have never come into general use. They are the verge, the horizontal,

the lever, the duplex, and the detached or chronometer.

84. **Verge Escapement.**—Although the first of these escapements may be considered to all practical intents obsolete, no satisfactory results being obtainable from it, yet, as it still continues to be made, it is necessary for me to notice it. M. Saunier says, in the second edition of his Treatise on "Modern Watchmaking, "There are still made, chiefly in the canton of Berne, more than 300,000 verge watches annually," but I think he would now considerably modify that statement.

The verge, vertical, or crown wheel, is the oldest known form of escapement. It was applied to the clock made by Henry de Wyck for Charles V., but the inventor of it is not known, though by some it is ascribed to Pope Sylvester II.

It is a recoil escapement, entirely frictional, and has no free arc, the supplementary arc taking place during the recoil, and consists (Fig. 10) of a crown escape wheel, which gives impulse to the balance through two pallets fixed at about a right angle on its arbor, the minute wheel of the train being also a crown wheel.

In Fig. 10 the diagrams A and B represent the plan and elevation of the escape wheel, with the portion of the balance staff, or verge, upon which are the pallets which control it.

The wheel is travelling in the direction of the arrow, and the tooth under the pallet, *a*, is just escaping after having given impulse to it. When the tooth under *a* has escaped the tooth under *b* will come into action with that pallet, and, after a recoil caused by the inertia of the balance, will in its turn give impulse until it escapes, when the pallet *a* will receive the next tooth in like manner, the motion being reciprocal, the pallets acting alternately at opposite sides of the wheel.

It is obvious that the escape wheel must have an odd number of teeth in order to act at all. The width of the pallets and the angle at which they are set to one another

is determined by the number of degrees through which the balance is required to move in its vibrations.

The greater the angle at which they are set the greater will be the vibration and the less the recoil, and *vice versâ*, as, of course, the greater the recoil the greater

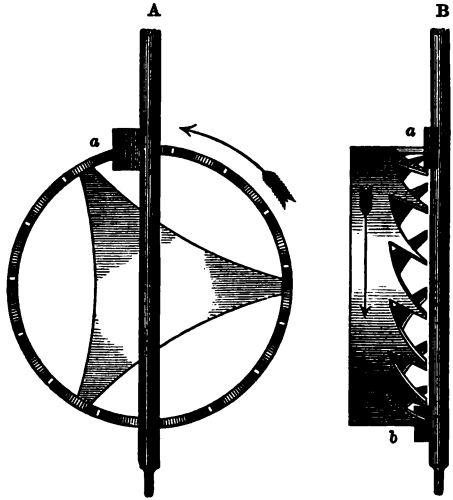

Fig. 10.—Verge Escapement.

will be the retardation produced upon the motion of the balance.

Writers on the subject differ as to the number of degrees, varying from 90° to 115°, of opening between the pallets proper for this escapement. English watchmakers generally used the smaller openings in their escapements, while the French made them with the larger, pitching the pallets deep into the wheel and cutting away a portion of the verge to get the teeth to act on the pallets nearer to its centre and thus give a longer impulse. But these escapements, unless very

carefully made, were liable to set owing to the very small leverage on the tooth commencing its action of giving impulse. To prevent this, they were usually made with very light balances. They were generally superior to the English escapement both in principle and make. With the extremely small angles the large amount of recoil retards the vibrations, so that practically it has been found best to place the limit between 95° and 105°.

In all cases the wheel should be planted as closely as possible to the centre of the verge so that the points of the teeth shall just free it, and, that the lift may be equal on the pallets, should also be planted so that the verge shall cross exactly its centre at right angles to it.

The pivot of the escape wheel nearest to the verge works in its hole in a dovetail in the potance, and in setting the escapement a little more space should be left between the top pallet and the wheel than between the lower one, to allow of more drop. This is necessary, owing to the weight of the balance pressing that pallet deeper into the wheel (the distance of the shake in the balance cock hole), when the watch is in a vertical position with the verge above the wheel than when it is lying flat; verge escapements very often tripping in the one position while they are all right in the other, where this precaution has not been adhered to.

The escape wheel should have no perceptible end-shake or the tripping will occur, whenever the wheel is by the amount of the shake too deep, while on the other hand the vibration will fall off when it is too shallow.

85. **Horizontal Escapement.** — The horizontal or cylinder escapement was invented by George Graham about the year 1700. It was the development of an idea conceived by Tompion, who had already invented and constructed an escapement of a similar principle, and may be considered to be the first step in the direction of good timekeeping, as regards the principles of an escapement for pocket watches hitherto made, being the first dead beat escapement applied to

them. Its advantages, as compared with the verge, were obvious and numerous (even as at first constructed) although it did not quickly supplant it. The wrong proportions at first adopted and the comparative difficulty of its manufacture rendered it unsatisfactory in its results, and unpopular with most of the watchmakers of the day.

Fig. 11, A, shows a plan of the escape wheel and cylinder. The wheel is travelling in the direction indicated by the arrow, and the tooth *a* just commencing to give impulse to the left hand, or entrance lip, of the cylinder. When it has given impulse, it will escape from that lip and fall into the position of the dotted tooth *a'* at Fig. 11, B, the right-hand edge of the cylinder being in the position marked by the dotted lines at 1, and continuing to travel until it reaches the point 2, when the inertia thus given to the balance being overcome by its spring, it will return to 3, when the tooth *a* will give impulse to the right hand, or exit lip of the cylinder, escaping as at *b*. The tooth *c* will then fall on the outside of the cylinder, as shown, the supplementary arc continuing to 2 and returning, the tooth *c* then giving impulse through the left-hand edge as before.

Fig. 11, C, shows the cylinder in elevation, containing a tooth of the escape wheel, the balance being at rest, and the power of the mainspring off, or the watch being down; *m* shows the space which is cut away to free the escape wheel.

Supposing the balance to be turned so far that the point *b* (Fig. 11, B) in the cylinder were twisted back to *o*, the tooth *c* would then fall past that point and lock the cylinder in that position. This is called overbanking, and to prevent this, a pin or stud is fixed in the balance cock in such a position as to be in, or very near, the centre of the vibration; another pin, projecting on the opposite side from the rim of the balance which makes about three-quarters of a complete turn at each oscillation, prevents it from passing the projecting pin in the

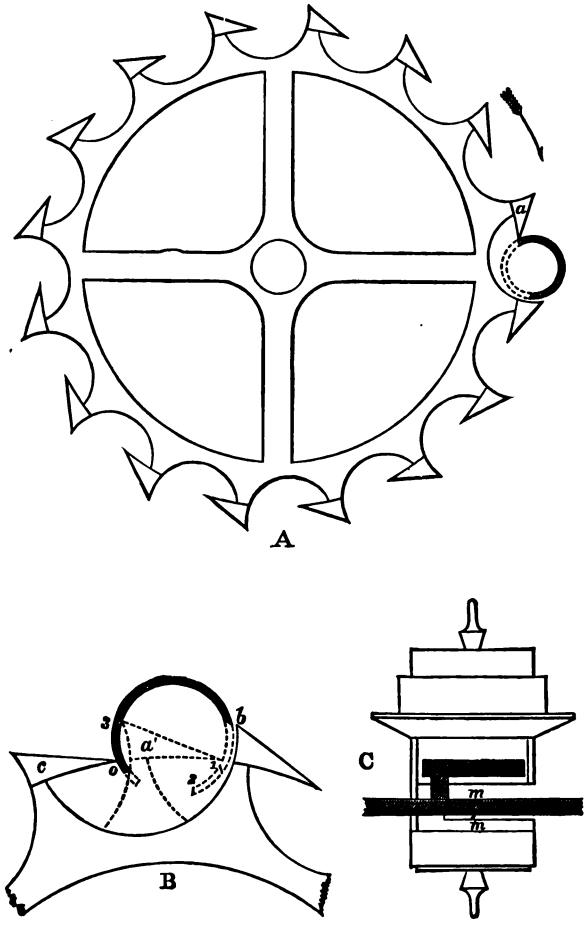

Fig. 11.—Horizontal or Cylinder Escapement.

cock. (The phrases commonly in use "balance makes a turn," "a-turn-and-a-half," &c., require perhaps a little explanation, as it is obviously impossible for a watch with any ordinary escapement to go if the balance swings round over a complete turn; the meaning is that it makes a turn, &c., at each complete vibration, *i.e.*, in its backward and forward arcs of motion added together.) These are called the banking stud and pin, and without them this overbanking would occur in the event of any sudden twist or jerk of the watch, or in the event of the balance vibrating too far, and so would stop the watch. Notwithstanding the general non-appreciation of the qualities of the horizontal escapement, the application of it to his watches, and its superior performance as compared with the verge, gained for Graham a great reputation which soon excited the emulation of watchmakers here and on the Continent, and watches with this escapement were, a few years after its introduction, made in large numbers; but the rapidity with which the cylinders were cut by the brass escape wheels, and the wearing of the brass pivot holes (which disturbed this escapement very quickly) prevented it from being universally used. These disturbing causes were, to some extent, overcome by the application, by Graham and some of his contemporaries, of ruby cylinders and jewelled pivot holes (rendered possible, as we have seen, by the introduction about this time of the art of precious stone drilling and working, by Nicolas Facio, of Geneva), but the introdnction of the duplex escapement by Pierre le Roy, the celebrated French watchmaker, in 1727, bade fair to extinguish it altogether; and it was not until the latter end of the eighteenth century, after exhaustive theories on the subject, published by Berthoud, Jodin, and other French watchmakers, that the capabilities of the horizontal escapement became generally understood.

The peculiar adaptability of it for very flat watches was soon perceived by the Swiss, who, having altered or modified its proportions, substituting a light and small

steel wheel for the brass one, and quick trains for the slow ones previously used, adopted it universally in their watches, and it remains one of the characteristics of a Swiss watch to the present day.

86. **To plan a horizontal escapement**: From the centre A (Fig. 12) describe a circle, of which the arc B C forms a

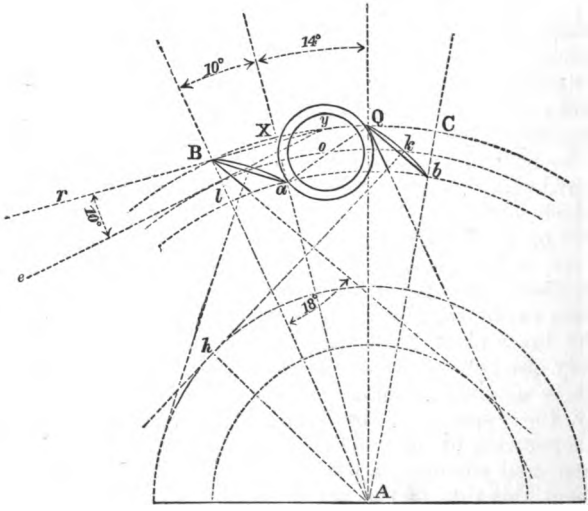

Fig. 12.

segment, and draw the radius A B. If the escape wheel is to have 15 teeth (the usual number), mark off intervals of 24° from A B (24° being $=\frac{360}{15}$°), and draw radii from the centre A to these points. Mark off 10° to the right of each of these radii. (When the circle determining the height of the inclines of the teeth is found, these radii will determine the positions respectively of the heels and points of the teeth.)

Draw the line $r\,y$, and supposing it is required to

give 20° of lift on each side of the cylinder, take off 10° from this line, and draw *e y*, cutting the radius A B at *l*. Then *l* B being = half the lift is = half the height of the impulse plane of the tooth. Describe *a b*, and join B *a*, *a* Q, Q *b*. From the centre *o* describe the circle *o* Q; this gives the outside diameter of the cylinder; taking off 1° from A X on the circle B C will give the thickness.

Not less than 18° from the radial should be allowed at the back of the tooth for freedom of the heel if square, or flat; or it may be cut away concentric with the cylinder; and the height of the plane of the teeth must not exceed one-tenth of the radius of the wheel or the cylinder would be too thin. The diameter of the cylinder to that of the wheel should be about as 1 to 9, and its acting part 200° of the circle, inclusive of the rounded lips. The lips should be rounded, as shown in Fig. 11, which adds a little to the lifting arc.

To form the impulse curve of the teeth: from the middle of the planes draw perpendiculars, as at *k h*; from the centre A describe the circle *h* A, touching these lines; and from the points of contact of the tangents with this circle draw the curves of the teeth touching the points and heels of the planes.

87. **Parts of the Horizontal Escapement.** — The cylinder should be pitched (as in the diagram) so that the middle of the *height* of the impulse plane of the tooth shall pass through its centre; this will give a lift acting equally before and after the line of centres, and ensure the least possible amount of drop. As the balance in the return supplementary arcs attains a considerable velocity before the incline of the tooth comes into action with either lip of the cylinder, it is obvious that with an impulse plane of a very small angle, or a very shallow tooth, the cylinder will have travelled some little distance before the plane will come into contact with its edge, or, at all events, the impulse given on its first coming into contact will be very slight until it has travelled a certain portion of the incline, owing to the

cylinder travelling as fast as, or faster than, the wheel on its first being released from rest, whereas with a plane of a very large angle the friction will be excessive, and the impulse will, in consequence, be very feeble (as may be observed in escapements with badly planted cylinders and very short teeth). The thing to be desired is, therefore, that the relative sizes of the wheel and cylinder shall be such that they will allow of a tooth which will give the necessary number of degrees of impulse (with the plane in contact with the cylinder throughout its entire length) with the minimum of friction.

The lift, or the angle moved through by the cylinder while it is receiving impulse either way, should be about 20°.

The next point to be considered is the form of the edge of the tooth for giving the impulse. The three principal curves adopted for this purpose have been the following:—

1. That which, by moving the wheel through equal spaces, will give equal arcs of impulse to the cylinder;

2. That by which the power of the impulse is rendered proportional to the increased resistance of the balance spring;

3. That approximating nearly to a straight line, which is thought to give the longest arc of vibration to the balance.

Of these three forms, the first is the one that has been found to give the best results, and is that which is now universally adopted in the best cylinder watches. The second of these, having a greater curvature near its point (which would no doubt be the correct form of tooth were the increasing inertia of the balance, which overcomes the increasing resistance of the spring, left out of the calculations), commences to give impulse in a very sluggish manner, gradually increasing in velocity; and as the latter portion of the curve near the heel approximates very nearly to that of the circumference of the wheel, and encounters little or no resistance from

the cylinder, owing to its accelerated motion, it traverses this portion with extreme rapidity, and falls with a very heavy drop on to the edge of the cylinder, which occasions a very rapid wear of that part, besides other irregularities incidental to excessive drop.

The straight incline is a very good form for the tooth, but is inferior to the first curve, which gives a uniform impulse throughout its length; this curve is formed with the radius of the wheel.

The proportions directly dependent upon one another (and by altering any of which we would alter the performance of the escapement) are:—The strength of the mainspring, the diameter of the escape wheel, the height of the incline of the tooth, the diameter of the cylinder, and the size and weight of the balance.

In the best Geneva-made cylinder watches the escape wheel is made small and flat, with a proportionate cylinder, and a small but comparatively heavy balance, and this construction gives the best results of which this escapement is capable.

Large escape wheels and cylinders should be avoided, as they require stronger mainsprings and lighter balances, and are more susceptible to disturbing influences, such as thickening of the oil, &c.

In the case of the balance vibrating too far, a weaker mainspring or a heavier balance should be applied, but if the balance should still bank, after either or both of these alterations have been made, the escape wheel teeth should be slightly reduced near the heel by a process called "topping" (*i.e.*, polishing or grinding a very little off them in the turns). This, by reducing the impulse and increasing the drop, will have the desired effect.

It is usual to allow of a little more drop on the inside than on the outside of the cylinder to ensure freedom for the heel of the tooth when inside it; for, were this precaution not taken, if the cylinder were planted a little too deep, and the tooth were the correct size, the heel would rub.

One property which the horizontal escapement possesses, and which renders it peculiarly adaptable for going barrel watches (or watches without the fusee adjustment of the mainspring), is, that it is not so much affected by any change in the motive power of the watch as any other escapement, the frictional rest of the tooth on the cylinder exercising a compensating power over the extent of the vibrations, so that any addition to the motive force is attended with additional friction on the cylinder, while the balance is performing the supplementary arcs of vibration, and so retarding it and compensating for the additional force of the impulses. This isochronising power was what recommended it especially to the Swiss, who saw the possibility of suppressing the fusee, of which they had never been in favour, and which, in fact, they never thoroughly understood.

88. **The Cylinder.**—Of the various methods practised for running in cylinders, the following, described by Mr. W. G. Schoof in vol. xv. of the *Horological Journal*, is, from its simplicity, among the best, as it avoids the necessity for using intermediate gauges, which are in themselves a source of error, and should always be avoided where it is possible to compare the piece of work itself under construction with the corresponding parts into which it is to fit.

Both cocks having been removed—"I then," says Mr. Schoof, "take a small piece of brass, the shape of the engraving (Fig. 13) and screw it in the place of the bottom cock, so that one of the holes—there are six in the illustration, though the number is of no consequence—comes in the same place as the bottom jewel hole would. The slit of course receives the screw, and the object of its being a slit, instead of a hole, is to allow of its being moved, so that one of the six holes can be brought into a proper position. The escape wheel and centre wheel are left in their places, and having selected a suitable cylinder I put it in the

Fig. 13.

frame, its arbor going through the hole in the piece of brass, or temporary bottom cock upon which the body of the cylinder rests; then I allow a tooth of the escape wheel to pass into the cylinder, and turn the cylinder round until the plane of the wheel is in the slit of the cylinder. If the cylinder sufficiently clears the wheel it is right; if it is too high, I turn away from the body of the cylinder at the bottom. Then, previous to turning down for the shoulder on which the balance is to rest, I mark with a safe-edge file the exact height of the shoulder, just sufficiently above the bar of the escape wheel on the fourth wheel pinion, which will be seen by resting the cylinder on the temporary cock. The height of the shoulder being thus marked off, when the cylinder is in the proper height for the escape wheel, I then proceed to shorten the lower arbor of the cylinder to the same length as the proper bottom cock is thick, care being taken to allow for such depth, as the end-stone sometimes lies below the surface of its setting.

"If now both cocks, having their endpieces removed, are screwed into their places again, the whole length may be taken with a pinion gauge or *douzième* tool and transferred to the cylinder, by shortening the upper arbor, when the cylinder will be ready for pivoting. In pivoting a cylinder to a very flat watch, it is sometimes impossible to get one with a slit sufficiently narrow, and in such case it is advisable to let part of the cylinder go a little into the bottom cock, to avoid weakening the cylinder too much, and this the intelligent watchmaker will know how to allow for."

The above applies only to the replacing of a broken cylinder, and would more properly come under the heading "jobbing," but as the manufacture of the horizontal escapement has ceased entirely in this country, and is fast declining on the Continent, and even in Switzerland, I shall not go into it any further than to explain the process to be observed in making a cylinder.

89. **Making a Cylinder.**—A piece of good steel wire

having been selected, a little larger than its ultimate diameter is to be, and a little longer than the height the cylinder will occupy in the frame, it must be drilled up the centre in a small lathe, with a meeting centre in the poppet head; the cylinder should be annealed before drilling. After drilling, the inside must be broached from both ends with a nearly straight broach, and, the height having been ascertained, polished till it will just admit a tooth of the escape wheel. The outside of the cylinder should be turned on an arbor and polished till it will just pass between two of the teeth. The height for the slots may be measured by placing a little red stuff on the edge of the teeth of the wheel, and touching an upright pointed peg previously forced into the lower jewel hole, with the teeth, or by means of the tool shown in the engraving (Fig. 14).

Fig. 14.—Tool for measuring heights.

Having cut the opening and slot, and rounded and polished the lips to the required shape, the hardening and tempering of the cylinder must be effected; this may be done well in the following manner. Place the cylinder on end in the centre of a small copper vessel having a tightly-fitting cover and, having filled it (and the cylinder), with powdered charcoal, bind it tightly round with copper wire, filling the interstices with soap in order to exclude the air. Then heat to a dull red in a charcoal fire, and harden by dipping the whole into soft water; the cylinder may then be taken out and (after trying its temper) tempered by either boiling in oil or letting down to a blue colour; the former is preferable as it ensures a more equable temper. The plugs should be made of the same steel as the cylinder of a smaller size and formed solid with the arbors. Having hardened and tempered them, they should be turned to almost fit the ends of the cylinder, when a few taps of the hammer will be sufficient

to fix them in their places. The hammering of them in may be done either by holding the cylinder in a clamp shaped for that purpose, or with the stopping held in a clamp, and the punching administered through the inner edges of the cylinder with a punch of a suitable shape. The balance being colleted on (the collet being fixed by means of the above punch) and the pivots being finished, place the cylinder in the frame and try the drops of all the escape wheel teeth, and see that the cylinder is perfectly upright, and that sufficient freedom is left in the openings for the teeth and the wheel.

CHAPTER XI.

DUPLEX ESCAPEMENT.

90. **Principle of the Escapement.**—There exists a good deal of uncertainty as to who the inventor of this escapement really was. The idea, without doubt, originated from the escapement of Dr. Robert Hooke, invented near the close of the 17th century.

It was constructed in its present form by Pierre Le Roy, but his claim to its invention was disputed by Dutertre, another French watchmaker; it was introduced into this country by Thomas Tyrer, after whom it was also called Tyrer's escapement.

The escapement as at first constructed had two escape wheels on the same staff or axis (whence its name), one of which was used for giving impulse, and the other, called the wheel of *arrête*, prevented it from running past the staff when the impulse tooth escaped from the pallet. The escape wheels were afterwards, as now, made in one, having the impulse teeth projecting from the plane, as shown in elevation in Fig. 15, I.

Fig. 15 is a plan of the duplex escapement; A is the escape wheel; B, the ruby pallet fixed in a steel disc,

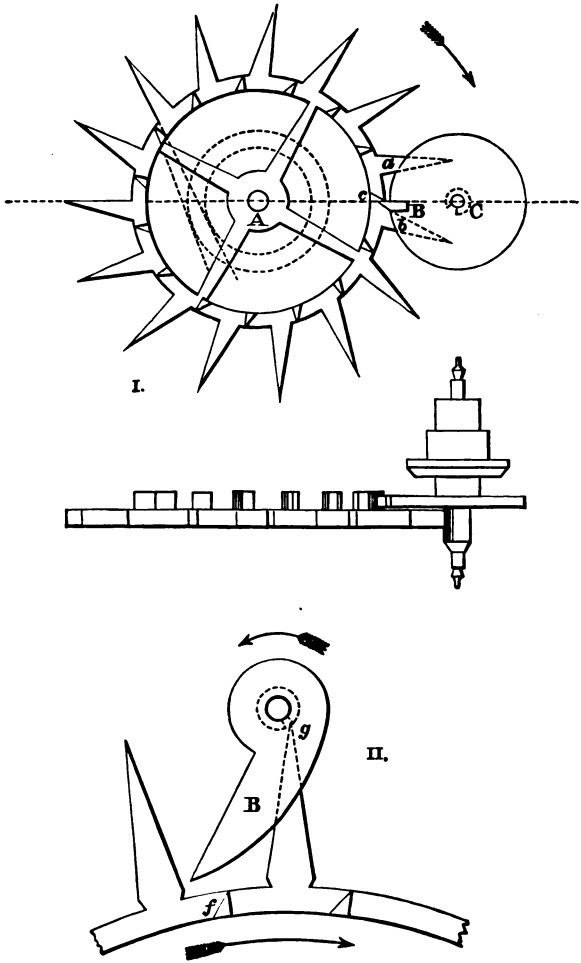

Fig. 15.—Duplex Escapement:—I. Plan and elevation. II. Action of impulse.

and C the ruby roller. The wheel is travelling in the direction of the arrow, and, the tooth *b* having escaped from the roller notch, the impulse tooth *c* is giving impulse through the pallet B. When *c* escapes from B the tooth *a* will fall on the roller and rest until the return vibration brings the notch of the roller C round to its point, when it will fall into the notch, sustain a slight recoil, and, contributing a small amount of impulse, pass out as at *g* (Fig. 15, II.), when the pallet B will have moved sufficiently round to allow the tooth *f* to fall upon it and give the long impulse as before. The two impulses are technically called the great and small lift.

The duplex escapement is not well adapted for going barrel watches from its extreme sensibility to variations in the motive force, and it was no doubt from this cause that Le Roy and the other French watchmakers quickly discarded it in favour of the cylinder escapement (which, as I have before remarked, possesses a regulating quality in itself), although they made many attempts to neutralise the effects of this irregularity by making the ruby roller extremely large, etc.

As the whole secret of obtaining isochronous vibrations of the balance lies in its spring, the fewer obstructions placed upon the free vibrations of the escapement, in the way of friction, etc., the better will be the performance of the watch; and this is the secret of the good going of well made Duplex, Chronometer, and Lever watches.

Theoretically the ruby roller cannot be made too small, but it is found in practice that it must be made of a certain size in order to obtain a safe rest, a sufficiently deep notch, and adequate strength to withstand breakage, and to prevent any bending of the staff, &c.; it should, however, be made as small as possible, subject to these conditions being fulfilled.

91. **Angular measurement of Lift.**—The amount of the great lift and the length of the pallet from its centre are dependent upon the diameter of the impulse wheel,

relatively to its distance between the centres. Of course, if the wheel have less or more teeth the pallet would be longer or shorter respectively.

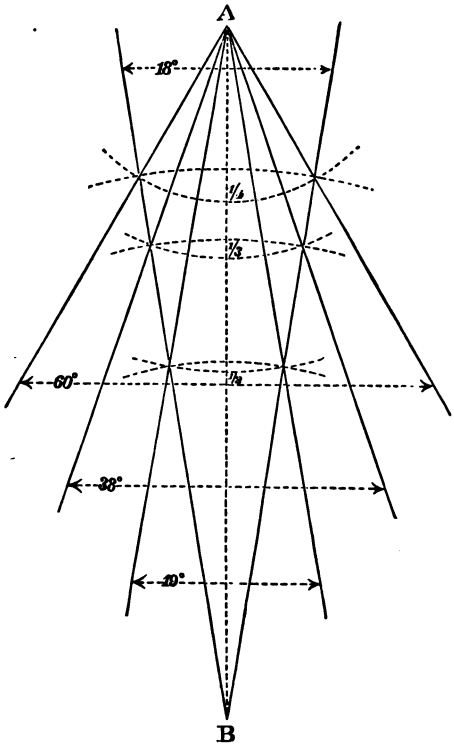

Fig. 16.—Angular Measurement of Lift.

Fig. 16 is a diagram showing the angular measurement of the lift of pallets of respectively $\frac{1}{4}$, $\frac{1}{3}$ and $\frac{1}{6}$ the radius of the impulse wheel. A is the centre of the

balance staff, and B the centre of the escape wheel. The relative size of the wheel, it will be seen, affects the depth of the intersection of the tooth in the arc traversed by the point of the pallet. The desideratum is to ensure a safe intersection and a sufficient lift, with the impulse given as near as possible to the line of centres. This is best secured by giving a lift of from 30° to 35°, which would require a pallet of about a third of the length of the distance between the centres, with a roller of a little less than a third in diameter of the distance between the points of two resting teeth. (*See* Figs. 17, 18, and 19.)

92. **Running of the Wheel.**—The train used in duplex watches is invariably the 18,000, as in the chronometer, and the balance usually vibrates nearly a turn. Overbanking cannot take place with this escapement as it does with the cylinder and the lever; the effect of the balance vibrating too far will cause the escapement to "run," *i.e.*, two or more teeth will escape at one vibration, causing the watch to gain a few seconds, as is the case with the chronometer escape.

Various methods were tried to prevent this running or tripping of the wheel. The old-fashioned plan was to fix a stud or pin on the balance staff just above the pallet, having a slot cut in it into which a pin, fixed in the staff, projected, allowing it to move a quarter of a turn. This stud had a sort of pallet projecting from it, and, if the balance moved more than half a turn either way, this pallet came in contact with a banking stud or pin fixed in the plate.

Another ingenious plan was that of having a loop formed in the outer coil of the balance spring, which, if expanded too far by the extra extent of the vibration, came in contact with a pin in the arm of the balance, and thus controlled the vibration. But this loop in the spring was found to be very much in the way of its isochronous adjustment, since it prevented the length of the spring from being altered in the pinning in.

93. **Duplex Escapement.**—No modern duplex watches

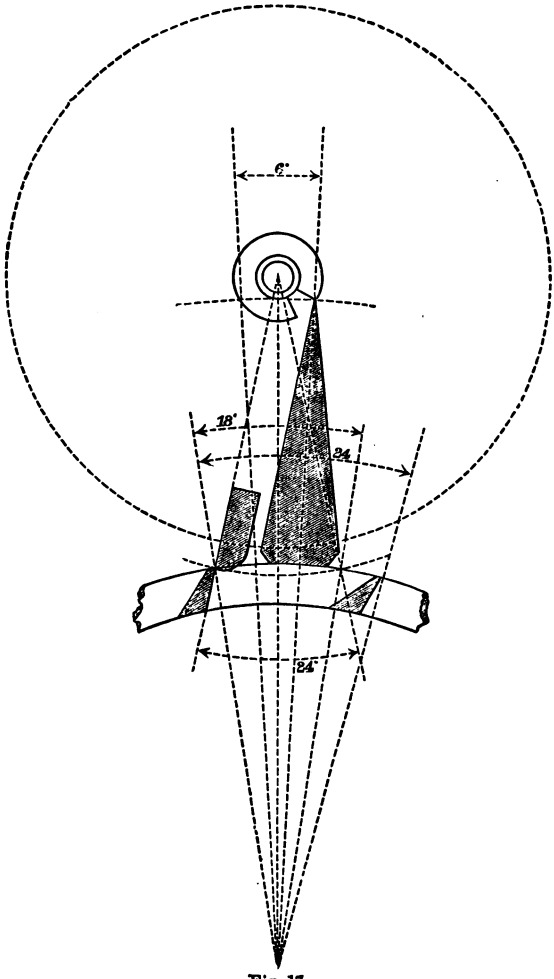

Fig. 17.

Distance between centres . .	= 4·00	Diameter of impulse teeth . .	= 2·31
Diameter of wheel	= 3·83	Length of resting teeth . .	= 1·53

Length of pallet = 1·74.

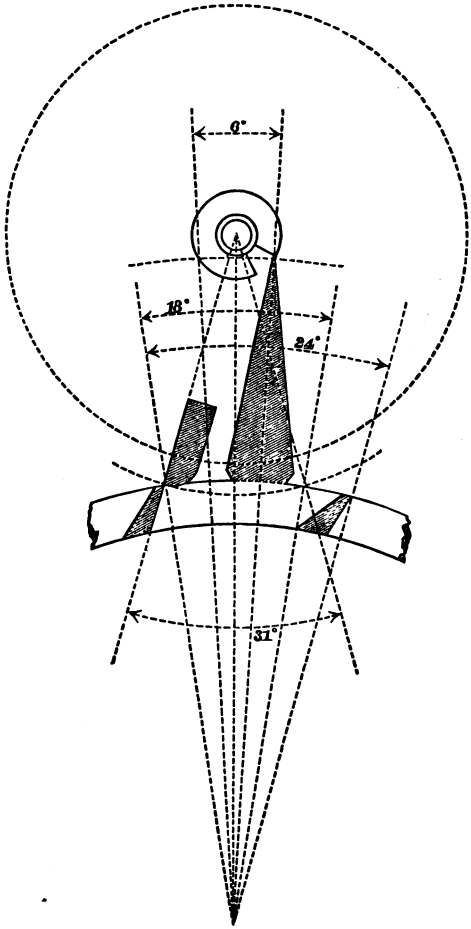

Fig. 18.

Distance between centres . .	= 4·00	Diameter of impulse teeth . .	= 2·55
Diameter of wheel	= 3·84	Length of resting teeth . .	= 1·29

Length of pallet = 1·50.

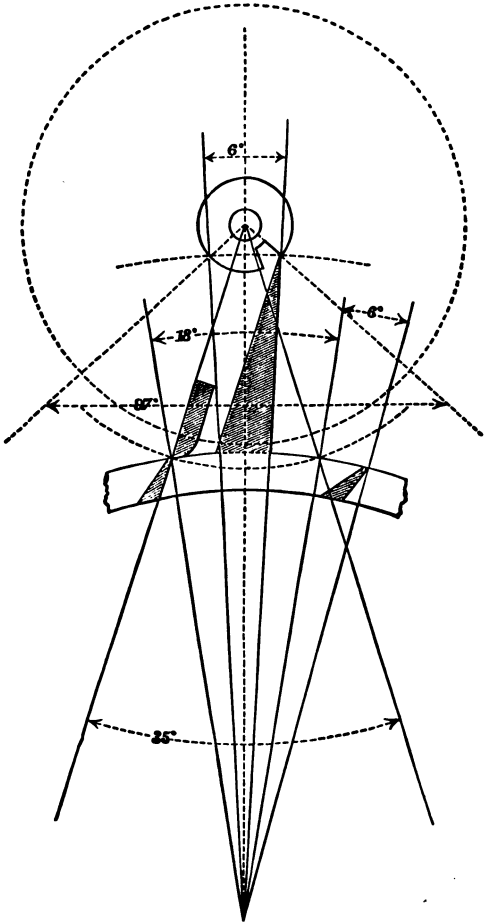

Fig. 19,

Distance between centres . .	= 4·00	Diameter of impulse teeth . .	= 2·71
Diameter of wheel	= 3·84	Length of resting teeth . .	= 1·13

Length of pallet = 1·40.

have any contrivance to prevent running of the escapement; its regular performance being best ensured by careful wearing on the part of the person who carries it. It is on this account, and because of the delicacy of its parts, not well adapted for persons of very active habits, or for those who hunt, ride, &c., but in the hands of a careful wearer it is capable of very good results, in fact, results such as few lever watches would give. A good deal has been said about the liability of the duplex escapement to set, but my experience is that a well-made duplex watch never stops from this cause in the course of ordinary wear. This setting of the escapement is occasioned by the balance being brought nearly to a standstill by a jerk or twist given to the watch while in the position of the escapement in beat with the motive power off, and the long tooth falling on the roller while it has little or no motion, and so stopping the vibration.

Thirty years ago, many of the watches made in London were exported to America, and, as the United States Government imposed a duty on completed watches but not on those in an incomplete state, most of the watches sent there had no cases, the movement being completed ready for putting into cases. Most of the movements were full plate ones and many of them had duplex escapements, the duplex escapement being then in great favour for what were called fine watches.

When we consider the delicacy of this escapement, its unsuitability for a full plate watch, and the way many of these watches were made, we may easily understand why the duplex escapement got a bad name in that quarter of the world, and also how it was the Americans took to machinery, and made watches themselves. It must have taken a good deal of ingenuity to devise so thoroughly bad a watch as a full plate duplex, and what was bad in the original construction was soon made worse by the American jobbers and the fitters of these movements to the cases. The consequence has been that an escapement which is capable of and has given

excellent results, has gradually gone out of favour, and almost out of use.

94. **Escape Wheel.**—The duplex escapement has, as may be seen, few parts; the escape wheel, pallet, and ruby roller may be said to form the escapement. The escape wheel, having two sets of teeth, is difficult to make, and, as it is of the utmost importance that it should be perfect in all its parts, special tools and skill are required for its production, and chronometer and duplex wheel cutting has long been a distinct branch of watchmaking. This wheel should be made of the very best and hardest brass; the long or resting teeth are sometimes cut with radial faces, and sometimes tapering to a point back and front from the rim of the wheel. The point of the face of the impulse teeth should be exactly between two of the resting teeth, and those teeth should stand upwards out of the plane of the wheel. They are in the form of a triangle, with the faces undercut at such an angle that when the points are at the commencement of the arc of intersection with the pallet, they are parallel to its face; if they are radial they will fall on the point of the pallet instead of its face and cut very rapidly. The wheel should be as large as possible, just freeing the arbor of the fourth wheel pinion.

95. **The Escaping Angle.**—Watchmakers have differed greatly as to the best escaping angle for this escapement, some advocating a shorter and others a longer lift. But it has been generally considered well in this, as in other escapements, to avoid extremes, and the lift prescribed, of from 30° to 35° at the balance, has been found to answer best, giving as long a free arc as possible consistent with avoiding the tendency to set. The proportions given in Fig. 19 are what are usually adopted in the best escapements. In Figs. 17 and 18 are shown wheels and pallets giving 24° and 31° of lift respectively, but with such proportions the intersection of the impulse teeth with the pallet is very small indeed when the freedom comes to be allowed for

(which would reduce the actual lift about 4°), which it is not in the diagrams. Added to this, the risk of setting

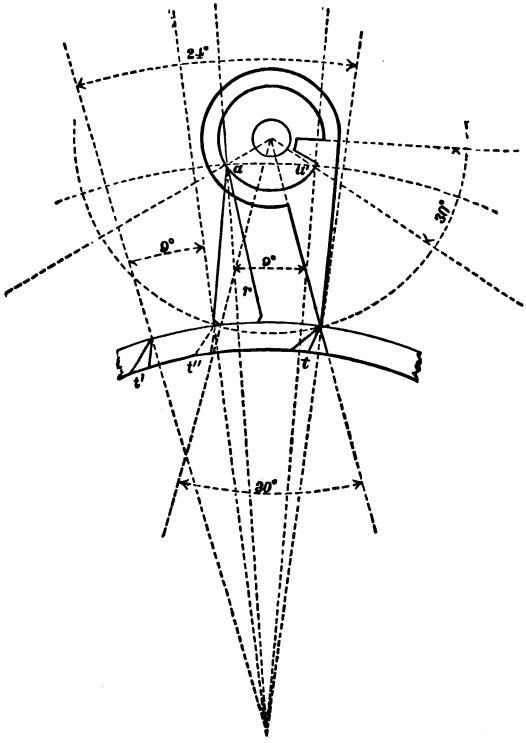

Fig. 20.—Action of escape wheel, with roller, &c., of correct proportions.

is greatly increased, and the escapement would have to be constructed with very great accuracy to perform well with such intersections, and even with the proportions of wheel and pallet given in Fig. 19 the work must be very

well done. The rollers in the three diagrams (Figs. 17, 18, 19) are about the size used in the best duplex escapement, and allow of a secondary impulse of 97° at the balance

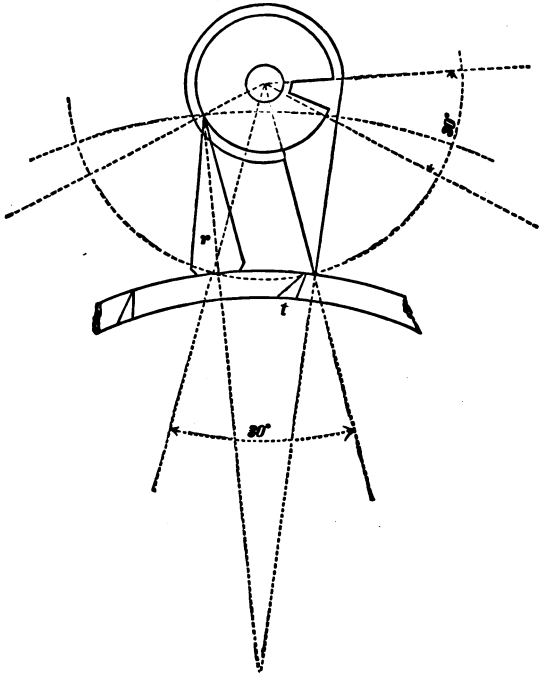

Fig. 21..—Action of wheel with too large a roller.

or 6° at the wheel. This, taken off from the 24° through which the tooth moves at each alternate vibration of the balance, leaves an effective lift of 18° at the wheel, less about 2°, which it is necessary to allow for drop and freedom of the pallet in passing and re-passing the points of the two impulse teeth, whose diameter it intersects in

the space between them. If the centres are planted farther apart there is a very shallow intersection of the roller, which causes a good deal of engaging friction,

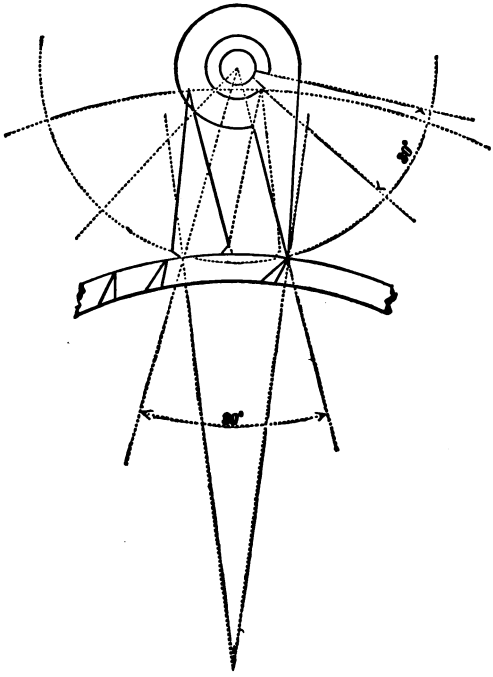

Fig. 22.—Action of wheel with too small a roller.

and is a source of danger from tripping, &c., and if there is much play or shake in the pivots. Fig. 20 shows a wheel acting with a roller of proper size. The impulse tooth *t* has just escaped the point of the pallet, and the resting tooth *r* has just reached the outside of the roller, against which it will remain until the return of the notch,

into which it will then drop, and, after sustaining a slight recoil, it will traverse the arc a, a', contributing the small secondary impulse to the balance and escaping at a', by which time the impulse tooth t' will have advanced to t'' and fall on the pallet, which will have arrived at that point, thus losing none of the impulse in drop, &c. Fig. 21 shows a wheel acting with too large a roller, or rather it shows that it will not act at all, as the tooth t, having traversed the impulse arc as far as it can until its progress is arrested by the tooth r coming in contact with the roller, is held in that position until the return of the pallet, which will then catch it and prevent any further action of the wheel.

On the other hand, with a roller excessively small, as shown in Fig. 22, there is an excessive loss of impulse arising from the large amount of drop either on the pallet or roller, or on both; and by moving the pallet round to decrease the drop on the pallet we increase that on the roller, and *vice versâ*.

Some writers on the duplex escapement advocate a large amount of drop in order to get the impulse close to the line of centres, and to avoid engaging friction; but my experience is that all unnecessary drop is a direct evil, causing a more rapid wear of the parts from the jar consequent on the impact, and a falling-off in the arc of vibration, and all that is necessary is to secure a safe action.

96. **Wheel Teeth.** — In making this escapement the wheel is taken as the basis of construction, from which all the other proportions are taken; if the radius of the impulse teeth be ·7, that of the wheel, the lifting angle, will be about 35°, which experience has proved to be the best for this escapement. The impulse teeth should be as wide as the arc described by the pallet will admit of, as should also the pallet, which must be flat on the face, like the pallet of a chronometer. The stone is often set in a shaped pallet, but it is better to set it in a roller, such as the roller in a lever

escapement, as it is more easily made, and there is less risk of the stone being broken or loosened when the roller is turned on the staff to adjust the drop. The size of this roller is unimportant, but it should be large enough to afford a secure setting for the pallet stone.

If the wheel teeth are quite true to each other, which can be tested by putting it on a true arbor, and touching the tops of both sets of teeth with a peg, it may be taken for granted that the wheel is correctly cut. There is no other method of testing it but by its action when in the frame. It may be crossed out with three arms, and these arms and the centre should be made as light as possible, the rim being bevelled off at the back for the same purpose, and it should be carefully poised.

Though it has always been customary to polish the long teeth of this wheel, and the rim between them, there is more risk of spoiling the wheel by polishing the teeth, and less reason for doing so, than there is in polishing the teeth of the chronometer wheel. The teeth are polished on a thin slip of hard wood held in the vice, with a thin tin polisher, charged with fine red stuff, the edge of the rim in the spaces being burnished as in the chronometer wheel.

The depth for the fourth wheel and escape pinion can be got in the depthing tool, and the distance be marked on the bar under the dial. The depth for the wheel and roller is of more importance, and should be marked off with the utmost care. If a piece of steel turned true to half the size of the roller be put into the depthing tool with the wheel, and the tool be adjusted until the tops of the teeth just free it, this will be the proper distance of the wheel from the balance. The depth can now be marked, and a small hole drilled, when the escapement holes will be ready for jewelling.

The importance of properly steady-pinned cocks, pointed out at p. 196, is of still greater consequence with this escapement, since the least movement or alteration in their position would render it useless.

97. **Pallet Roller.**—The roller for holding the pallet and the escape pinion can now be roughed out; the pinion must not be long, and should have a deep hollow cut in its face to prevent it from drawing away the oil from the pivot hole. After driving a piece of brass or gold on, and forming a collet, and fitting the wheel tightly on this collet, the pinion may be faced and pivoted. Now cement the escape cock on to a piece of brass, and turn out in the mandrel a sink to free the impulse teeth, taking care not to turn it too thin.

The steel for the balance staff should be of the best quality. After carefully hardening and tempering it, let the balance on to its place, and turn the seats for the spring collet and pallet roller to size and polish them. The roller is made with a short pipe at the back; it must be carefully fitted to the staff, as, although it must be tight, it should not be difficult to turn on the staff, the amount of the drop on the wheel tooth depending on the distance between the pallet and the notch in the roller.

After pivoting the staff, turn down the lower part of it from the pallet roller to receive the ruby roller. This is a delicate operation, and requires great care, as the staff is at this part no thicker than a pivot. It is reduced on a bed in a rimmer in the turns with a steel polisher and sharp stuff. A small ferrule, a weak bow with a fine hair, lessen the risk of breaking. The roller must be fitted well, but easily, as if it is tight it will break, and if too loose it will not be quite true when it is shellaced on the staff.

The diameter of the roller should be about ·29 of the distance between the points of two of the resting teeth of the wheel, but the size may be varied a little to suit the pitch of the wheel. Escapement makers usually have a few rollers which have some defect, by which they get the exact size of the roller required; there being no absolute size for the roller, the planting of the escapement to some extent determines it.

The notch must not be too wide, as if so the recoil of

the wheel is increased when the tooth falls into it in the returning vibration of the balance (a wide notch also increases the liability of the escapement to trip), but the teeth should have shake in every position of the notch to the wheel. The edges of the notch should be slightly rounded off and the roller well polished.

The roller is fixed with shellac, a brass cap a little larger than the roller being fitted to the end of the staff below it, and fixed in the same manner. This cap strengthens the roller and staff, and helps to secure the roller in its place.

The balance must be rivetted before the roller is shellaced on, and the notch kept in such a position that the timing screws at the balance arms will be in a line with the pendant when the watch is in the case, as it is often necessary to alter these screws to bring the watch to time in positions, and with the shorter and more uniform vibrations of the balance with a duplex escapement, there are not the same objections to putting it a little out of poise that there are in a more detached escapement, where the balance has a longer arc of vibration.

The heat for melting the shellac that fixes the roller and cap must be communicated to the staff by holding the arm of the balance in a pair of long-nosed pliers or a Swiss pin-holder, filed so as to grip the balance arm. The pallet should be close to the rim of the wheel, but free from it in all positions; it should be in a radial line from the balance staff, and the pallet stone should be parallel to the acting faces of the impulse teeth of the wheel at the commencement of the arc of intersection.

These impulse teeth should be accurately cut, and at equal distances from one another. The excellence of this escapement depends more on this than on anything else.

The pallet should just be free of the top of the impulse tooth when it is brought round to receive the impulse, and be the same distance from the same tooth when the next long tooth is resting on the roller.

The impulse tooth should only have perceptible drop on to the pallet when the balance is passed gently *from* the wheel, but the pallet must free the tooth if a peg is put inside the rim of the balance, and a tooth is allowed to escape while the balance staff is pressed *to* the wheel. If the wheel is tried all the way round, and each impulse tooth falls on to the pallet with the peg outside the balance, and the pressure, therefore, is in the direction of the balance pivots, there will be no fear of the impulse tooth missing the pallet, as the balance at this point will be travelling so fast that the pallet will get some distance in front of the tooth before it receives the blow, and a very little drop on the pallet of a duplex escapement materially shortens the arc of vibration of the balance.

The pivots of both the escape wheel and the balance must fit the holes very well, and have only perceptible side-shake, and the end-shake must also be very little.

Duplex escapements are said to wear rapidly, but I have duplex watches that have been going for more than twenty-five years with scarcely noticeable wear in the escapement.

That some of them have cut and worn rapidly may be easily understood from their construction. The impulse teeth, even in full plate watches, were as narrow as possible, although there was here no stint of room, with a thin, steel pallet (appropriately called a hook), rounded on the face and end. The wheel—not always of the best—had too much drop on the pallet, and the wheel cutting the pallet, and the pallet the wheel, it soon grew too short, and a new pallet being difficult to make, the jobbing expedient of knocking the cocks nearer to catch each other, finished the escapement.

CHAPTER XII.

CHRONOMETER ESCAPEMENT.

98. **Early Forms of Escapement.**—The principle of the chronometer or detached escapement was invented by Pierre Le Roy, about the year 1747. It was subsequently improved upon by Berthoud and by John Arnold, and was perfected by Earnshaw.

The first chronometer escapements had the passing spring fixed to the roller, but Arnold and Berthoud transferred it to the detent. The detent worked on a pivoted arbor, having a spiral spring round it to bring it back into position after it was released by the small passing piece or pallet. Earnshaw improved upon this by doing away with the arbor and making the detent and spring in one piece, as shown in Figs. 23 & 24. The escapement of John Arnold is thus described in the specification of his patent, 1782:—

"The tooth of the balance wheel A [in the drawing accompanying the specification] is an epicycloid [*not a cycloid, as described by some writers*] that acts upon the pallet B, which in the part of action is a straight line from the outer edge of the pallet to the centre of the verge. The scape wheel rests on a single pin, whilst the balance is vibrating until it is unlocked, to add new impulse to the balance."

The unlocking of this escapement took place inside the wheel, the acting curves of the teeth being raised from the plane of the wheel, as in the duplex, for this purpose. The escapements of Earnshaw had different shaped teeth, and, as in those now constructed, the unlocking took place outside the wheel. In modern chronometer escapements the teeth are also raised from the

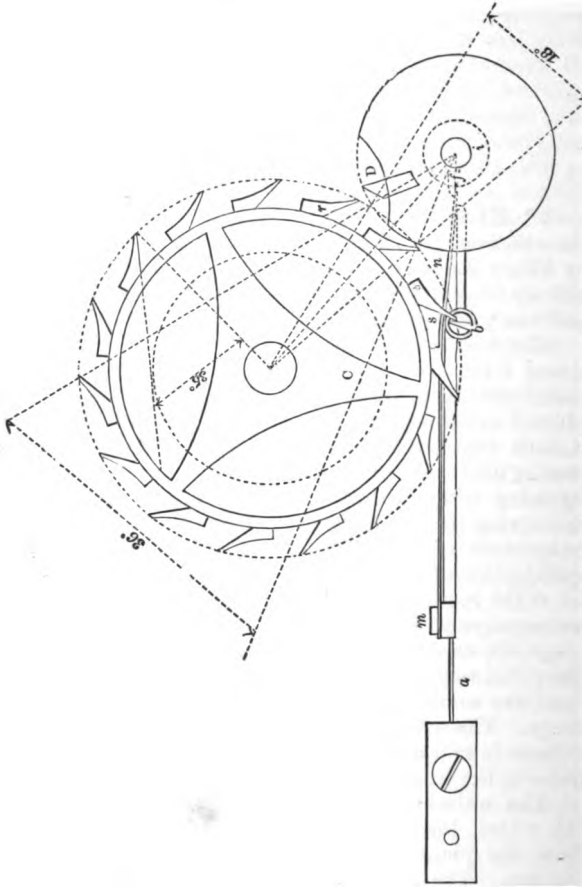

Fig. 23.—Chronometer escapement (plan).

plane of the wheel, but this has nothing to do with the locking, and is only to give a greater wearing surface to the teeth and a light wheel.

99. **Present Form.**—Fig. 23 is a diagram of the escapement as at present constructed. C, the escape wheel, is arrested in its course by the stop *b*, which is a hard stone fixed in the detent; the pallet *f* fixed in the small roller *i* is just commencing to effect the release of the wheel by drawing the detent out from it in the return vibration of the balance. When the tooth *e* is thus released, the pallet D in the large roller will have arrived at a position a very little in advance of the tooth *r*, which will fall upon it, and thus give impulse to the balance. In unlocking, the detent bends at *a*, which is a spring formed in one piece with it. The spring *m n* is fixed to the detent at *m* by a screw. This spring projects a little beyond the nose of the detent proper, and the pallet *f*, in the return vibration, lifts this spring and passes it without its having any perceptible retarding effect; it is made very weak and usually of gold. The detent is sprung slightly on to a stop at *s*, which prevents it from going too deeply into the wheel. This stop, which

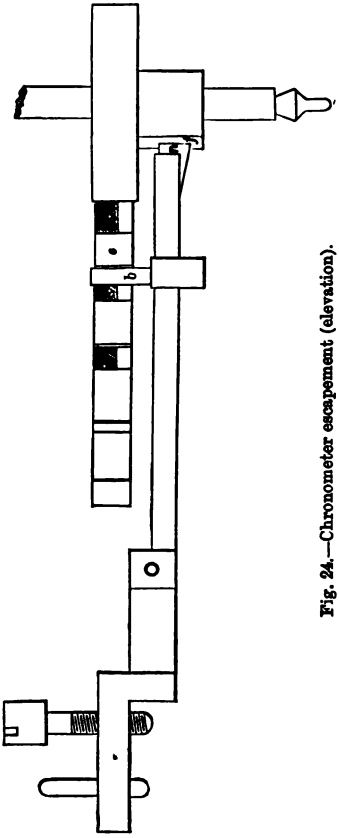

Fig. 24.—Chronometer escapement (elevation).

is not shown in the diagram, is a screw fixed in a separate arm of brass screwed on to the plate. It was formerly formed of a solid piece of metal, which was screwed on to the plate, but this was altered partly on account of the trouble of adjusting it to the required depth and partly because, being rigid, the repeated blows upon it of the detent produced a certain (or, rather, an uncertain) amount of adhesion very difficult to calculate upon. It will be seen that this escapement, like the duplex, allows the impulse to be given only at alternate vibrations of the balance.

100. **Lift.**—As with the duplex, the requisite amount of lift governs the relation of the diameters of the escape wheel and of the arc traversed by the impulse pallet to one another. In marine chronometers, with their slow trains and heavy balances, the amount of lift found to be best is about 45°, while in pocket watches the maximum allowed is 40°. Escapements allowing of lifts of respectively 45° and 36° for marine and pocket chronometers are what are usually made by our best chronometer makers. With a lift of 45° the radius of the pallet arc is about half that of the escape wheel (with a fifteen-toothed wheel). The complete arc of vibration is about 430°, or, as it is generally expressed, a turn and a quarter, in both marine and pocket chronometers. To avoid the risk of setting, the 18,000 train is used in the latter instruments, while the former have the 14,400 train, principally on account of the beats occurring at intervals of half a second rendering it more easy to observe accurately; the slow train also allows of a heavier balance being used, which is a gain in an instrument that always remains in the same position, the momentum, being greater, giving a steadier rate.

As the relative sizes of the roller and escape wheel are dependent upon the lift, so are the proportions of the detent, the radius of the arc described by the lifting pallet, and the locking depth of the detent stop in the wheel dependent upon one another.

It is evidently advantageous to have the locking of escapements as nearly tangential as possible (other conditions apart), and this condition would be best obtained in the one under discussion by having the stop fixed in the detent at such a distance from the end that it would intercept the fourth tooth from the pallet (inclusive), as may be seen in the diagram; the point of the fourth tooth being only a very little in advance of the vertical radius of the wheel, while that of the one now resting on the stop is considerably behind that line.

101. **Long and short detents.**—And here is involved the whole question as to the relative merits of long and short detents, which is, after all, merely a mechanical question embraced in the theory of the second order of lever, which the following diagram (Fig. 25) and proposition will expound:—

Let F A B represent a detent reversed; the point A is the stop which is required to be drawn out from the wheel after it has arrested it; P is the power of the lifting pallet to effect this; W is the weight (or the resistance of the spring and the friction of the wheel on the stop) to be overcome, and F is the fulcrum of the lever (or the bending point of the spring).

Let A F $= a$ and B F $= b$.

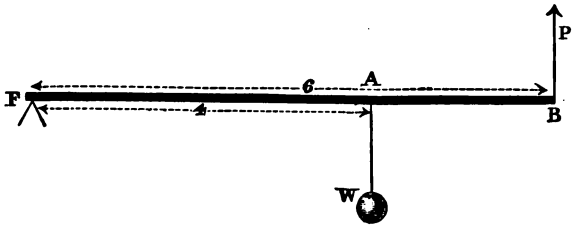

Fig. 25.

Then the equation of equilibrium is

$$P a = W b,$$

or Moment of P about F = Moment of W about F.

If two forces act on a lever, they will balance when their moments about the axis are equal, and it is evident that (assuming P and W in the diagram to be in equilibrium) by moving the stop A nearer to the fulcrum F we should overcome the balance in favour of P, and *vice versâ*. With a given wheel and roller, therefore, which determines the distance A B, it is clear that the nearer F is to the stop A the less will be the resistance offered to the unlocking. On the other hand (as to afford a safe locking, the stop must intersect the wheel a certain distance), the nearer F approaches A the longer will the lifting arc of the lifting pallet require to be, which would increase its diameter, or, by deepening the intersection with an arc of the same radius, give it a more oblique action, and also keep it longer in contact, the one retarding the vibration and the other interfering with the detached properties of the escapement. An extreme in the direction of very short detents should, therefore, be avoided.

An extremely long detent would have to be made considerably heavier to give it rigidity, and—in order that it should fly back instantly on being released from the lifting pallet—the spring correspondingly stronger, both offering greater resistance to the unlocking and to the good performance of the escapement, in which all the parts for obvious reasons should be made as light as possible. Moreover, the centre of percussion or of oscillation of the detent, where the stop should act, would be below the steel piece wherein the stop is fixed, and some other arrangement would have to be made for the banking of the detent, which would otherwise not stop dead, but be in a continual state of vibration.

The proportions of this and every escapement cannot be determined by any mathematical rule until the functions of each part have been carefully considered.

The other proportions of the escapement being fixed, the total length of the detent must be determined by (1) the distance of the stop from the free end and the

depth necessary to ensure a safe locking, and (2) by the lifting power relatively to the resistance offered by the spring of the detent and the friction of the wheel teeth on the stop.

The impulse roller is always made of the diameter of the arc described by its pallet, having a piece cut out of it, as shown at D, in Fig. 23, to allow the escape teeth to pass. This not only facilitates the setting out of the escapement, but is a necessary precaution against the wheel teeth coming in violent contact with the detent (in the event of the pallet action failing and the wheel running), which they would distort and perhaps break, as may be seen when the staff of a chronometer is broken by accident.

102. **System of Manufacture.**—Although the principle of the ship's chronometer has undergone very little change since the time of Earnshaw, the system of manufacture has been greatly altered during the last forty years. Many of the chronometers belonging to Government and kept at the Greenwich Observatory are by the early chronometer makers, and, as these men made the movements themselves, they also made the style of their work as distinctive as possible; their chronometers were generally smaller than those of the present day, many being made to go thirty hours only. When movement making became a distinct trade the sizes were made uniform, and a small and a large "two-day" movement was adopted in addition to the "eight-day" then more frequently made. The smaller size has gradually disappeared, and the large "two-day" is now the standard ship's chronometer. This uniformity of size simplified the manufacture by systematising it, and greatly reduced the price of chronometers, as for all practical purposes the sizes of the various parts are the same, although made by different movement makers, and are approximately as follow:—The dial is 4 in. in diameter, the barrel being as large as the frame and box will admit, from 1·5 in. to 1·9 in. in diameter and

·75 in. in height; the great wheel is about the same diameter as the barrel; this barrel will take a spring of sufficient strength and length to keep a chronometer going for fifty-six hours, with a balance of 1·25 in. in diameter and weighing ·35 oz.; these relative sizes of the barrel and balance are found from experience to answer best, and are generally adopted. The size of the escape wheel should be about ·56 in., and a roller half the size of the wheel will give a lifting angle of 45° at the balance, this arc being greater than is adopted for pocket chronometers, there being no chance of a marine chronometer setting from external disturbance.

It is not usual for escapement makers to make their own balances (it would not pay them to do so), but there is no difficulty in it, if they have the proper tools and wish to make experiments. A balance for a "two-day" chronometer will be supplied the proper size and proportions by any balance maker.

The escape wheel should be made from a piece of the best brass, well hammered, and a hole the required size be drilled and broached (but not after the teeth have been cut) carefully; it should then be turned on an arbor to the above diameter, true, and flat on the sides to about ·065 in. in thickness, when it is ready to have the teeth cut on it. The teeth must diverge about 20° from the radial at their faces, in order that the point only shall come in contact with the impulse pallet, and that the tooth shall have a tendency to draw the stone on which it locks towards the centre of the wheel.

The roller is made of steel, in the same way as the brass disc for the wheel; care should be taken in broaching the hole in the roller as in the wheel, and it should be left the proper size at once, as broaching afterwards is likely to put it out of truth. The wheel disc and the roller must not be turned on the common Swiss arbor; they are not true enough, nor of a proper shape; the arbors must be tempered ones, turned true after they have been tempered.

The roller must be as much as it will lose in polishing larger than half the diameter of the wheel, and a little thicker than the wheel disc—about ·08 in. When the wheel is cut, the depth can be marked off and the frame jewelled.

Now put the fourth wheel and escape pinion in the depthing tool, and, after adjusting it for a proper depth, mark it off from the fourth wheel hole by a circular score on the underside of the top plate. This depth is not very important, as the finisher will have to run it over again, and he need not work to the fourth wheel hole; but the wheel and roller depth requires great care in pitching, as after the holes are jewelled they cannot be altered. The hole in the potance should be turned out in the mandrel, the wheel and roller mounted on temporary arbors and put into the depthing tool, and the tool adjusted until the roller lies between two teeth without any shake, but free. The tool must be held perpendicular to the plate when marking off this depth, and where the circle intersects the one already marked on the plate will be the place for the escape wheel, when a small hole should be drilled, and the frame jewelled for the escape pinion and balance staff holes. The jeweller must take his uprights from the holes in the potance and top plate.

Cement the escape wheel on a piece of flat brass, and turn out the centre right up to the teeth, leaving no ring, so that half the thickness of the teeth stands above the plane of the wheel at the top (as shown in elevation in Fig. 24). This sink lightens the wheel, while it leaves the points, or acting parts of the teeth, wide enough. The wheel may now be crossed out. Escape wheels are generally crossed with three arms. It is a common practice to polish the teeth of the escape wheel, and a worse practice could not be adopted; it is not only useless but mischievous, as perfect truth of this wheel is indispensable to a good escapement. The backs of the teeth are polished with a tin polisher, the wheel having pieces of brass fitted on each side, and being fixed in a

swing tool, and the bottom of the space between the teeth burnished. If the escape pinion be not quite true, it must be made so by filing the centres of the arbor, after which new centres should be turned, as filed centres will not keep true if worked upon. Turn the arbor to its proper size, and drive a brass collet on for the escape wheel; this collet must be quite close to the end of the pinion arbor. The fourth pinion should be pivoted a good distance above the pillar plate to allow of its wheel freeing the centre wheel and the third wheel pinion.

103. **Marine Chronometer Escapement.**—The methods used for obtaining the lengths of arbors or staffs that have holes with end-stones in small work, are not available in large chronometers, and, it being important that these heights should be obtained with certainty and exactness, various appliances are used for the purpose.

Fig. 26 represents a simple tool I made to take these heights with. It consists of a very small brass tube, somewhat resembling a pencil-case, with a pivot fixed in a short plug at one end, and into the other fits a piece of brass, friction-tight, with a pivot at its extremity. These pivots are small enough to go into the balance staff holes, and by drawing the centre out of the tube until it is a little longer than the distance between the holes you wish to work to, the pivots can be put into the holes, and the cock or plate pressed into its place; this will give the exact distance between the end-stones and the length required. But practical escapement makers rarely use tools for this purpose.

Fig. 26.—Tool for Measuring Heights.

The pinion may now be faced and pivoted, and the arbor polished; the wheel must be just free of the top plate, and very tightly fitted on the brass collet before it is rubbed on, otherwise it will not be safe.

The sink in the top side of the wheel is finished grey with a paste formed by rubbing two pieces of blue stone together with a little oil on the face of an ivory chuck;

or it may be greyed with a bow and drill stock and a piece of ivory fitted as a drill. Before polishing the back of the wheel, a piece of brass should be fitted to the sink in front, and cemented into it to prevent the wheel from springing and being made too thin in the middle. The balance staff of a marine chronometer has the balance screwed on to it, instead of being riveted, and for that purpose a large brass collet is driven on to the roughed-out staff about half way. The staff should be treated in the same way as the pinion, and turned down for the impulse roller. As the balance must be kept close to the top of the plate, and the impulse roller just flush with the under side of the plate, the heights are easily obtained.

The hole in the balance is usually larger than there is any need for the staff to be, and a seat is turned on the brass collet for the balance, which is fixed to the collet with two screws, whose heads are counter-sunk in the arms. The seats for the spring collet and impulse roller may now be finished, and the lower part of the staff, on which the small or unlocking roller has to be fitted, turned down; this portion of the staff should be turned small, as the unlocking roller is not more than one-third the diameter of the impulse roller. The pivots should fit the holes, so that the loose jewel holes will fall off them with their own weight, and should be just long enough to project through them.

Fig. 27. Conical Pivot.

104. **Pivots.**—Conical pivots may be made much smaller than straight ones, as they are much stronger from their shape; but pivots of this form have a tendency to draw away the oil from the holes by capillary attraction, the pivot tapering gradually from the size of the arbor. To prevent this, in all good work, what is called a back-slope is made in the form of Fig. 27.

This is generally looked upon as a mere ornament, but it is essential, as if too much oil is put to a hole the arbor will certainly draw it away if its thickness is not reduced

at the pivot end in this way. There has been much controversy amongst watchmakers as to the proper shape of pivots, but theorising on this subject without practical experience is worse than useless, and the first lesson experience teaches is that the best pivots are those which stand best.

A shape of pivot strongly recommended by several theorists and escapement makers for reducing the side retardation is shown in Fig. 28. It looks very well on paper, but, as it is larger at the end, the actual side friction will be greater than with a conical pivot having its acting part straight, and it is also weakest just at the bending or breaking part, and if it is left flat on the end, as recommended, to equalise the side and end friction, the least contact with the edge of the hole will injure it sufficiently to prevent any good performance of the watch or chronometer. A good pivot should be so hard that it will break instead of bending, the portion of it that fits the hole being quite straight, and the cone should come close to the end of the pivot, as the acting part of the pivot is very short. The holes for conical pivots should be of the shape shown in Fig. 9, so that if they are not exactly opposite and parallel to each other, the edges of the holes will not, when in certain positions, grip the pivots and thus bind the staff.

Fig. 28.

105. **Locking Stone.**—The impulse roller should now have the slot made in it to hold the stone: it must be cut in a radial line and the stone fitted tightly, the outer edge of the stone just coming to the edge of the roller. Many good chronometers have been and are made without a stone; they will go for years without the impulse face being marked if it is left hard, while if cut a little it is easily polished. Many of the old chronometers had no stone, and the pallet face was not in a radial line from the centre, but was undercut; this was a mistake, as it gave the wheel teeth too much drop, cutting the face of the pallet, and diminishing the arc of vibration of the balance.

When the stone is let into the roller the crescent to admit the teeth of the wheel can be filed out; there must be sufficient freedom behind the stone to allow the tooth to get away in case it misses the pallet, and the space in front of the stone should be only a little less than the distance between two teeth of the wheel. The small or unlocking roller has now to be made, and let on to the staff; its diameter should not be more than a third of that of the large one, as the unlocking stone must project beyond it, making its actual diameter nearly half that of the large one, and it must not be more. This stone is sometimes made the same shape as the impulse stone, but, as it must lift the gold spring in passing and unlocking nearly the same distance on each side, it is best to be rounded off on each side like a thin tooth of a wheel.

If a circle is struck off on the top plate the exact size of the wheel, and the wheel and balance staff, with the impulse roller on it, is put into the frame, there will be little space or shake between the two teeth of the wheel and the roller. Draw a line along the face of the third tooth which is to rest on the locking stone, and where this line cuts the circle describing the size of the escape wheel, will be the place for the locking stone. A straight line drawn across the centre of the mark made for the locking stone from the balance will give the line on which the detent must be planted.

106. **The Detent.**—The reasons given on pages 129, 130, point out the advantages of short detents, and they are fully borne out by the experience of modern chronometer makers. Detents are usually made ·8 in. in length, measuring from the tip of the gold spring to the lower end of the detent spring proper, the length of the foot being of no consequence; this length may be divided into four, one part for the horn, that is, from the tip of the gold spring to the locking stone, one for the spring, and two parts for the blade. The detent must be made of the very best steel, the hole for the locking stone drilled and broached to the size of the stone, and the hole in the foot for fixing it to

the plate drilled and tapped. If the hole for the locking stone be brought over the mark made on the plate, and the hole in the foot on the line drawn to fix its position, the hole in the plate may be drilled; this hole should then be filed into an oblong slot, in order that the detent may be moved a little nearer to or farther from the balance holes, and the body of the screw for fixing it left plain and fitted to the slot. The stud into which the banking screw is fixed must now be filed up and planted along the outside of the detent, the place for the banking screw marked, and the screw fitted. The banking stud must not be left too rigid; the banking screw is put in from the side next to the escape wheel; the pipe in the detent which holds the locking stone projects considerably beyond the blade of the detent (see Fig. 24), and rests, or banks, against the inside of the head of the screw; the screw head should be large enough to just free the unlocking spring, and the pipe should rest on the outer edge of the head so that the banking may be as near the locking of the wheel tooth as possible. As the screw must be very steady (but not hard to move) for the adjustment of the depth, it is best to make a slit with a fine saw from the end of the banking stud into the screw hole; the sides of the stud can then be squeezed in a little and the screw will hold spring tight.

Although there is here (unlike the escapement to pocket chronometers) plenty of room, the detent should be made as light as possible, the spring should be broad, and the blade stepped down from it, so that the wheel tooth, when resting on the locking stone, shall be in a line with the centre of the spring. This is the principal thing to be kept in view in filing up and planting the detent; therefore the pipe must not be in the centre of the blade, but outside it, as the stone is for strength much wider than it is required to be for locking the wheel. The detent spring must be weak enough not to offer too much resistance to unlocking the wheel, but it must be strong enough to resist bending from the pressure

of the wheel and also to return quickly to the banking screw when the unlocking stone is drawn out from the tooth. This power of returning does not depend altogether on the strength of the spring, for if the detent is long and heavy, it will not return quickly, even should the spring be a little strong. There should, therefore, be a correct proportion between the strength of the spring and the weight of the detent. If the detent when finished is held and deflected at the point half an inch, it should vibrate four seconds before coming to rest; this, however, is one of the things that experience alone can teach.

CHAPTER XIII.

POCKET CHRONOMETER.

107. **Preparing the Different Parts.**—In a three-quarter-plate pocket chronometer the diameter of the balance should in no case exceed that of the barrel, and the width of its rim should be ·6 of that of the mainspring; the length of the screw head and the thickness of the laminæ, together, should be equal to the width of the rim.

The escape wheel should be ·45 of the diameter of balance, and the roller about ·04 more than half the size of the wheel. The wheel should be made first in the following manner. Take a piece of the best brass, well hammered, fix it in the mandrel and centre and drill a small hole in it; turn the brass flat on the sides, and cut out a disc very little larger than the wheel required; it can then be put on an arbor and turned on the top and sides to the required diameter and thickness (about ·04 of an inch); the arbor should be perfectly true and tempered.

When the wheel is cut, rough out the roller, leaving

it a very little larger than it will be when finished, and somewhat thicker than the wheel, and drill the hole for the balance pivot half way between the centre hole in the plate and its inner edge, and a sufficient distance from the fusee to keep the balance quite free of the chain. If the fourth wheel hole coincides with the seconds pivot hole in the dial it may be worked from, but if not it must be stopped and another hole drilled exactly in the centre of the dial hole. The fourth wheel and escape pinion depth being got in the depthing tool, a score must be made marking this distance on the dial side of the bar, and the escape wheel and roller depth being obtained by fixing them on temporary arbors in the depthing tool (allowing the roller to lie between two of the wheel teeth without shake), this distance should also be marked on the bar; the point where the scores intersect one another will be the position for the escape hole.

The cocks having been steady-pinned (page 196), the escape cock should have its thickness reduced in the mandrel to about ·05 of an inch, and a circle sufficiently large to free the wheel and about two-thirds of its thickness should be turned away from the under side of the cock, and the cock must be stoned-up flat, when it will be fit for jewelling. As there is no boss for a regulator or index left on the balance cock, all the further preparation that is necessary is to turn it down till its top side is in the plane of the pillar plate; that is, if the pillars are high enough to allow sufficient space for the cylindrical spring usually applied to pocket chronometers, if not, the cock must be left sufficiently high for that purpose.

The sink for the fourth wheel should be turned out in the bar before sending it to the jeweller to about ·03 of an inch for his setting, otherwise he may make his setting too thick; the end-stones to the escape wheel hole in the bar should be set in steel, the setting and screw heads being left projecting above the bar. The escape wheel should be cemented on to a piece of brass, and the upper

side of it turned away in the mandrel to about half its thickness right up to the teeth, as directed for the marine chronometer escape wheel, to lighten it. The rim should be divided into three, and the wheel crossed out; by clamping it between two small discs of brass in the swing tool the backs or hollowed parts of the teeth may then be polished with a thin tin polisher and fine red stuff, and the spaces between them burnished with a narrow burnisher. The escape pinion and balance staff can now be proceeded with: the pinion should first be shortened to about twice the thickness of the fourth wheel, which gears into it, and have a deep hollow cut in its face, to prevent the oil from the pivot hole from getting into it. The other side of the arbor must now be turned down and the collet for the wheel driven on to it; this collet is usually made of soft steel, but gold is better.

There is little difficulty in getting the height, as the pivot must be as close to the pinion as possible, and the wheel let on to the collet so that it will come close to the pillar plate. When the lower pivot is the proper length, the total length for the pinion can be obtained by measuring from the outside of the jewel holes with the end-stones taken off with a *douzième* tool, which, for greater accuracy, should have a vernier slide gauge attached to it. When the balance staff is roughed-out and tempered, the balance can be let on to its seat, and the staff shortened until the balance is sufficiently free of the escape cock to allow for the length of pivot that will go through the hole. When the pivot is made, the arbor may be polished and the roller opened until it will go on to its place on the staff; the staff must be turned down small below the roller for the small unlocking roller, which, as in the marine escapement, is about a third of the diameter of the large one, when this roller can also be made and let on to the staff. The impulse roller can be cut with a file or cutter in a radial line, and the stone fitted. It must fit tightly and be perfectly square on its face to the balance staff, a crescent being cut out of the

roller's circumference to permit the tooth to fall on the pallet; two-thirds of this crescent should be in front of the pallet. The roller, if the proper size, can now be hardened and tempered (it should be let down to a blue), and finished, the stone being fixed in with shellac.

The point or edge of the pallet must be exactly in the circumference of the roller; if a hole is opened in a piece of brass to the size of the roller the pallet may be pressed against the side of the hole while the shellac is warm, which will bring the outer edge of the stone in this circle.

The small roller may be proceeded with in the same way: the notch for the stone must be cut nearly to the centre; the stone should be of the form of a very thin wheel tooth, and should not project to more than half the diameter of the impulse roller. Before this roller is hardened, a part of its circumference is filed flat, to avoid the risk of the pliers slipping on to the stone while the roller is being shifted to regulate the drop of the wheel on the pallet.

108. **Spring Detent.**—The spring detent is, of course, the important and critical part of the chronometer escapement, and it would be a mere waste of time for any but a good workman to undertake the making of one. Draw a circle the exact size of the escape wheel on the plate, and put the wheel and the balance staff, with the roller on it, into their places, by holding the wheel with the fingers in such a position that the roller is free of the tooth on each side of it; a line may then be drawn on the plate with a small point along the face of the tooth that would be resting on the locking stone of the detent; the point where this line intersects the circle drawn on the plate shows where the locking stone must be placed, and a straight line drawn from the centre of the balance hole across this point will show the exact position in which the detent must be planted. The best cast steel should be used for the detent, as, if it will not harden at a low temperature, it will be useless. I have found Huntsman's steel the best for this and other

purposes where a similar quality of steel was required. The length of this detent is easily determined: it must not extend beyond the edge of the plate, and must be made short in order to secure lightness. If the foot of the detent be stopped down until the lower part of the steel touches the fourth wheel, the filing-up can be proceeded with. When the greater part of the steel is removed from what is to form the blade and spring, the hole in the foot can be marked and drilled, and the hole for the screw in the plate also drilled; the distance from this hole in the plate and the mark already made to determine the place for the locking stone can be marked off on the detent and the hole for the stone drilled.

The blade of the detent must be kept free of the underside of the escape wheel, but the spring should be twice the width of the blade, half the width standing above the blade in the plane of the escape wheel; at the place where the hole is drilled for the locking stone a pipe is left, so long that it is only free of the fourth wheel; this pipe rests against the banking, and also enables the locking stone to be securely fixed. It must be outside the blade of the detent, for the same reasons given for that of the marine escapement.

109. **Banking Piece.**—When the detent is so far advanced, the banking piece should be made. The usual form now in use is what is termed the horse-shoe, which may be made in the following manner:—

Turn out a sink in the pillar plate round the balance staff about ·03 of an inch in depth, and as large as it can be made without going into the sink for the centre wheel. Take a piece of sheet steel, thicker than the sink, as the projecting arm that is to receive the banking screw must go below it; make a hole in the steel piece large enough to free the unlocking roller, and a circle on it the size of the sink, then file and turn it to fit the sink, leaving an arm projecting for the banking screw. This arm should be placed in a line with the detent and close to it, and the banking piece should be fixed to the plate

with two sunk-headed screws, and both screws and banking piece be somewhat below the plate when finished. Make the arm of the banking piece just free of the fourth wheel, and the place for the screw will be seen from the mark already on the plate for the locking stone. The arm must now be drilled and tapped, and fitted with a small gold screw, having its end turned off to free the gold unlocking spring; this screw must be fitted very tight, and the banking piece should be very well fitted to prevent any possibility of its being shifted, which would alter the depth of the locking stone in the wheel. The hole in the foot of the detent is filed into an oblong slot, and the screw to fit it to the plate is made with a plain part to fit exactly the width of this oblong. If the locking stone be temporarily fixed in the pipe with a half-round pin, and the escape wheel and balance, with only the impulse roller on the staff, and the banking stud be put into their places, the position for fixing the detent in can be tried by moving it towards the roller until the escape wheel tooth is resting on the locking stone, and the roller is just free of the tooth on each side of it.

The position of the banking screw had better be tried before the stud is hardened, as it will be easier to alter it then than afterwards. When its position is determined, and the detent fixed by the screw in its foot, the hole for the steady pin can be drilled, and after drilling and tapping the small hole in the blade for the screw which fixes the unlocking spring, it can be hardened; it is best not to make the spring too weak before hardening, but to reduce it afterwards. The best way to harden it is to tie two pieces of thin brass, one on each side of the spring, with fine binding wire, using a charcoal fire and water; the tempering may be done by blueing, but the safest way is blazing in oil, letting the oil ignite freely, and after the flame is extinguished, allowing the detent to cool in the oil, when it may be finished. It should be made flat and square with a steel

polisher and oilstone dust, and reduced to the necessary dimensions (of course, the lighter the blade is made, the thinner the spring may be), after which it may be finished,—the grey parts with fine emery and brass or tin polishers, and the polished parts with zinc polishers and diamantine.

After having ascertained the angle at which to set the face of the locking stone (it should be set back so that the tooth of the wheel will draw it up to the banking screw head), it may be permanently fixed in the pipe with a half-round pin and shellac; it should not be quite upright, but inclined at such an angle that the lower part of the wheel teeth lock on it close to the detent. This will prevent any springing of the detent, by getting the pressure near the middle of the spring.

110. **The Unlocking Spring.**—The unlocking spring is usually made of gold, hammered very hard; it is attached to the detent by a very small screw close to the spring; and, instead of a hole in the end for this screw, a notch is cut, the size of the screw, to allow of the spring being adjusted for the unlocking lift. The gold spring must not be wider than the blade of the detent, except at the ends, where it is also left thicker than in the middle, and it must be weaker than the detent spring. It should lie close alongside the detent, but should only touch it where the end is screwed on, and at the extremity of the horn against which it rests; it is slightly bent, or sprung on, so as to return to its place against the horn when the unlocking pallet moves it away in the return vibration of the balance; its end must be carefully filed up and finished, and it must lie horizontally in order that the unlocking stone may come fairly on its side. The lift of this spring must be only perceptibly less in passing than in unlocking, since, if the passing lift is very little, the unlocking will not be certain, and the spring should be only left long enough to carry the detent just perceptibly beyond the point where the wheel teeth drop from it.

When the escapement is completed the detent is set

on to the banking; this may be done in the process of polishing, or, if this is thought dangerous, by heating a piece of steel or brass wire in the flame of a spirit lamp, holding one end in the vice, and bending the spring of the detent against a part of it that is not too hot, and pressing it there until it becomes a straw colour, allowing it to cool in that position, when it will retain the bend or set thus given to it; there is no risk of breaking it in this way.

It must be remembered in making the chronometer escapement that, the balance being more detached from the train than in any other escapement, and the intersection of the parts that give and receive the impulse being consequently less, the greatest accuracy must be observed in making and trying all the actions and parts.

CHAPTER XIV.

THE LEVER ESCAPEMENT.

111. **Double Roller Escapement.**—Fig. 29 shows the plan and elevation of the lever escapement. A is the balance, B B′ the lever; C, the escape wheel; *m m′*, the pallet; *t*, the ruby impulse pin; *c*, the impulse roller; *c′*, the small roller; *v*, the guard; *s*, the escape wheel pinion, its staff being cut away in the diagram (Fig. 29, II.) to show *s′*, the pallet staff. Part of the balance rim is broken off to show the parts underneath better.

This figure is a diagram of a double roller escapement, the action of which is the same as that of the single or "table" roller referred to further on.

The balance receives impulse at each swing or half vibration. The escape wheel tooth having escaped the inclined plane at *m′*, the tooth on the opposite side at *m* has fallen on the locking face of the pallet, where it will

remain until the balance returns in its vibration, and

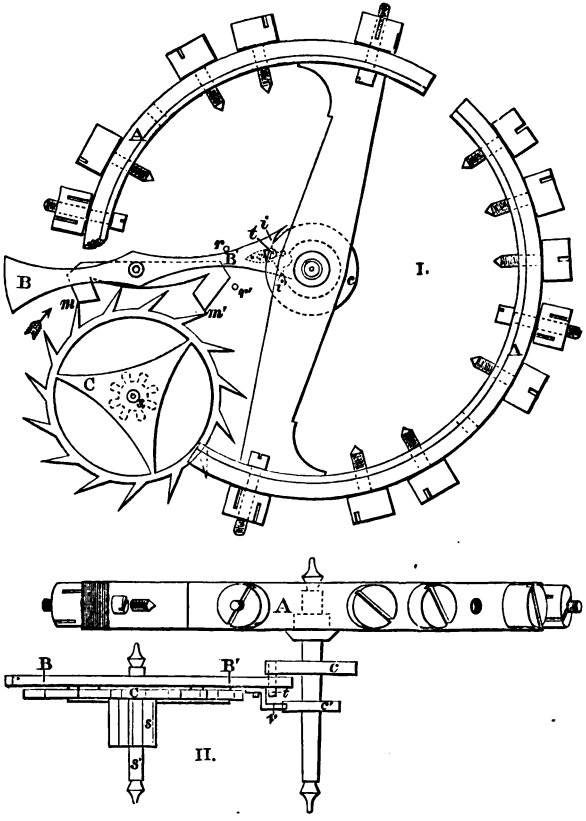

Fig. 29.—Double Roller Lever Escapement. I. Plan. II. Elevation.

the impulse pin (t) coming into the notch will then move the lever (B B′) over to the other side; the escape wheel tooth in this motion, as the pallet at m is drawn out

from the wheel, falling over the corner and sliding along the inclined plane, giving impulse to the balance through the lever notch and the impulse pin (*t*). The pallet is prevented from going too deeply into the wheel by a couple of banking pins (*r r'*) planted in the pillar plate of the movement, which are not shown in the elevation.

The locking faces of the pallet are cut back at an angle from the radius of the escape wheel, so that the teeth may hold the lever in the position of rest against the banking pins until the return vibration of the balance releases it. A slight supplementary run, as it is called, of the locking face, past the tooth's point takes place after a tooth drops on to either face, occasioned by the tooth drawing the pallet still deeper into the wheel than when it at first drops on to it.

As the lever passes the large roller (*c*), the guard (*v*) passes through a space cut out of the small roller (*c'*), and this guard is so placed that when the lever banks, it is just free of that roller. This is to prevent the lever from being thrown out of position to receive the impulse pin in its return, by any outward jerk or shake drawing the pallet away from the tooth which is holding it, the horns of the lever (*i i'*), also are prolonged, as shown, to guard against any possibility of the pin missing the notch. Any such jerk would cause the guard to strike against the edge of the roller, whence it would rebound into the position of banking. But this guard is useful only in an emergency, as, if either locking face were so insufficiently back-sloped as to allow of this occurring frequently, it would speedily affect the rate of the watch. The end of the lever (B) is only a counterpoise.

If the importance of the lever escapement were to be measured by its all but universal application to English watches at the present time, its treatment should occupy a very considerable portion of a book of this kind. Enough has been written about it to fill a very large volume without exhausting the subject, but space will not allow of my doing more than barely summarising it.

Although the detached lever was invented as early as the year 1750, it was the last escapement that came into use in high-class pocket watches; and as I am treating of escapements to some extent chronologically, I shall here discuss it,—the last of the watch escapements.

112. **The Rack Lever.** — The first escapement recorded on the principle of giving greater angular impulse or lift to the balance through an intermediate piece or lever, was invented by Huygens, or l'Abbé Hautefeuille, the latter of whom published a description of it in the year 1722. This was identical with the Rack Lever (Fig. 30), patented by Litherland of Liverpool, and which I have before noticed.

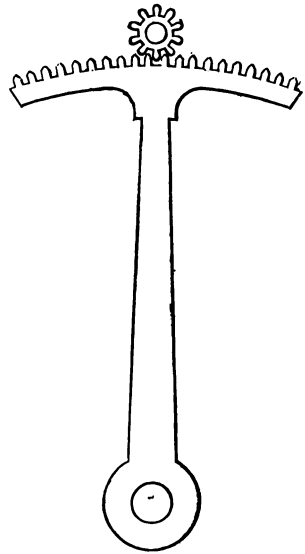

Fig. 30.—Rack Lever.

It consisted of anchor pallets similar to those of a recoil clock escapement, on whose axis was fixed a rack or segment of a toothed wheel which geared into a pinion on the axis of the balance, the balance being at no part of its vibration free, or disconnected from the train. This, apart from the friction of the rack and pinion, rendered good timekeeping impossible. As shown in Fig. 30, the end of the lever terminates in a rack acting in a pinion on the axis of the balance. This rack cannot leave the pinion; the only effect of an external shake causing the balance to vibrate more than its normal arc, would be to drive the pallet flukes deeper into the wheel

or to the bottom of the tooth. There is no necessity for any safety action, no banking pins, and (as the pallet rest is circular) there is very little friction or resistance to the unlocking.

113. **The Detached Lever.**—About the year 1750, Mudge invented the detached lever escapement; and it is to some extent a reflection either on the mechanical genius or the goodnature of the watchmakers contemporary with and immediately following him, that it was allowed to lie dormant for more than half a century; although it is, in some of its parts, the model of the best form of the lever escapement. The spring detent escapement of Arnold, and the cylinder, or horizontal escapement, invented by George Graham, were at this time attracting all the attention of watchmakers, and Mudge himself was absorbed in trying to obtain the award offered by Parliament for the improvement of marine timekeepers, so that his lever escapement was neglected.

In some of its proportions it was faulty and could not have given very satisfactory results, and he probably did not feel enthusiastic about it, as he seldom mentions it in his correspondence, &c., and only made two or three such escapements. It was the same in form as the present double roller, the lever and roller action not having since been improved upon. Mudge's son gives a drawing of this escapement in a book published in 1799, in which the pallets (embracing five teeth of an escape wheel with twenty) resemble very much those of Graham's dead-beat clock escapement. They had no "draw," as it is called, on the locking faces (the rest being, as in the clock pallets, circular), and therefore any jolt given to the watch would throw the guard against the roller, and thereby interfere with and retard the motion of the balance. The defect in the locking may have suggested to Mudge the small roller, which offers less resistance to the balance by the safety pin coming in contact with it.

However, when the above fault was corrected by the

lockings being back-sloped, as in escapements made subsequently, the value of the double roller was soon manifested, and there is no form of the lever escapement so trustworthy, or that gives such good results; but, being somewhat more delicate, it is more difficult to make, and consequently more expensive than its now only rival, the table roller.

114. **The Crank Lever.**—Arnold's spring detent could only be applied to large watches, and, being extremely delicate and difficult to make, was very expensive; while

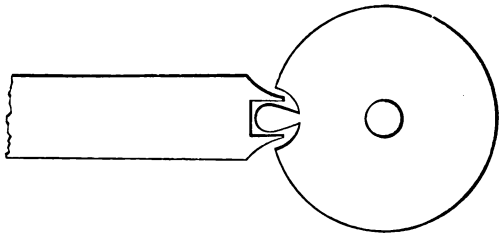

Fig. 31.—Crank Lever.

the cylinder escapement (much esteemed at first) soon began to lose favour in consequence of the brass escape-wheels then used cutting the cylinders very rapidly. When, therefore, Litherland of Liverpool resuscitated the lever escapement by taking out a patent for the rack lever, which had been improved by Julien Le Roy, but not hitherto made in England in this form, it became very generally made in this country, and made rapid headway against the other escapements. It had some good points, and, being simple and strong, was very well suited for the watches of commerce then made. But this escapement, although an improvement, did not long satisfy the demand for a better mode of transmitting the impulse to the balance, and Massey, also of Liverpool, shortly afterwards invented the crank lever (Fig. 31). In this escapement the roller is small, having a tooth

exactly like the leaf of a pinion projecting beyond its circumference. This tooth acts in a square notch cut in the end of the lever, and the lever is formed like a fork, the two points of which act as safety-pins against the edge of the roller to prevent the lever from getting out of action with the tooth of the roller.

This lever and roller action was not so good as that of Mudge, nor would the performance of the escapement have been so good had not Massey altered the shape of the resting faces of his pallets, making them straight and giving them a certain amount of "draw." This "draw" of the pallet was all that Mudge's escapement required to make it what it now is, nearly perfect as an escapement. But although improved by having a ruby pin substituted for the pinion leaf, and the roller raised from its plane, or elongated, to allow of the guard points acting as before, the crank lever required to be made very carefully or, if not, the pin would sometimes catch on the points of the lever and stop the watch. The notch also had to be made wider in reference to the pin for the same reason, which resulted in too much drop in the impulse—another source of irregularity which a watchmaker will fully appreciate. These difficulties brought about various modifications until the introduction, by another Liverpool man, of what is now called the table roller.

115. **Table Roller.**—This escapement, from its simplicity and general excellence, is what is employed in nine-tenths of the lever watches of the present day; the only difference between it and the crank lever is in the roller action. The impulse pin, instead of projecting beyond the edge of the roller, is set within its circumference, standing up out of its plane. The safety action is effected by a very small pin, placed quite close to the bottom of the notch in the lever, and passing the roller in the same way as the guard of the double roller escapement, through a small segment cut out of its circumference in front of the impulse pin.

116. **Two-pin Escapement.**—Another form of lever, invented by George Savage, a man who did much to improve the lever escapement and make its capabilities better known, is called the "two-pin" escapement, although, I think, "three-pin" would have been a more appropriate name, for the two pins referred to do only the least important part of the work, *i.e.*, the unlocking of the wheel. (Fig. 32.)

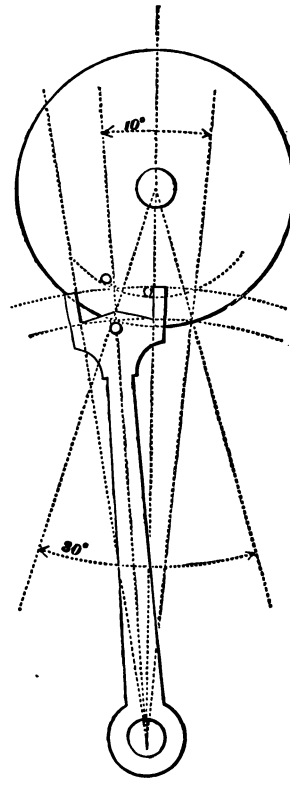

Fig. 32.—Two-pin Lever Escapement.

Savage saw there was a loss of power consequent on the double duty of the impulse pin of an ordinary lever escapement (which, before receiving impulse, has to unlock the wheel through the opposite side of the lever notch and necessitates a certain amount of shake), and also on the unlocking action taking place before the line of centres of the lever and roller. He therefore separated these functions, reversing the ordinary method of placing the impulse pin in the roller, and the notch in the lever, by cutting a very small notch in the roller and placing a small pin in the lever, occupying the place of the ordinary guard pin, for which purpose it also served. He then placed two pins in the roller at each side of the notch to effect the unlocking:

and as the distance between these pins is equal to the chord of the lifting arc at that radius of the roller, the unlocking takes place at the line of centres; and, with the proportions adopted in the figure (viz., $8\frac{1}{2}°$ on the planes, and $1\frac{1}{2}°$ on the locking faces of the pallet) the impulse will be given at $\frac{1}{2}°$ from the line of centres on the lever. But this escapement must be constructed with the greatest nicety, and is very difficult to make. It has also been found that the small pins, made generally of gold, cut the steel on which they act very fast.

Various attempts have been made to prevent the wear of the parts by substituting a broad thin stone set in the roller for the two gold pins, and a small ruby pin for the gold one in the lever; but notwithstanding this, and the fact that this is theoretically the most perfect form of lever escapement, there are few of them made.

117. **The Double Roller**, as its name indicates, has two rollers on the balance staff, the large one carrying the impulse pin, as in the table roller, whilst the small one is used for a safety roller only. In an ordinary escapement, with a lifting angle of 30° at the roller, the intersection is only just safe when the escapement is a good one and all the parts well made and jewelled; but if the pallet-staff have brass holes and less skilful workmanship generally, pallets of higher angles and a longer escaping arc are necessary. There are no proportions of the lever escapement upon which greater diversity of opinion exists than on the proper lifting angle of the pallets. Lifting angles of 15° may be found in old watches, while some modern makers advocate as low an angle as 6°. Now, as the driving planes increase in length with the lifting angle, and also become more divergent from the course in which the wheel is travelling, the friction increases, and in an increasing ratio as the planes approach more nearly to lines of the wheel radii.

On the other hand a pallet of as low an angle as 6° would require a greater proportional amount of depth

on the locking faces, as the amount of locking, to be safe, could not be reduced beyond a certain point; therefore the effective part, or the angle of real lift, would be proportionately less, and it would be very difficult to make an escapement that would be safe with a pallet of so low an angle. Experience has decided the matter, by showing that it is better to avoid extremes and in favour of pallets of from 8° to 12° of lift.

As, in the double roller escapement, the guard of the lever approaches nearer to the axis of the balance, and (as has been demonstrated in the previous remarks on escapements) the nearer that guard, or pin, approaches the centre, the deeper will be the intersection and therefore the greater the safety; pallets of as low an angle as 8° may be used. This is analogous to the relative sizes of the pallets and wheels of the duplex and chronometer escapements, and will be further treated of in my directions for planting the guard pin. Practical watchmakers doubt whether there is sufficient advantage in the principle, to compensate for the actual drawbacks in the shape of the difficulty of arriving at the extreme exactness requisite in the making, and for the risks of accident or wear attending any of the different parts. It is not advisable to adopt such proportions for watches of an ordinary character, and many escapement makers are of opinion that pallets of 12°, with a lift of from 32° to 35°, will answer best in all but the very highest class of watches. I believe, however, that in such a watch a double roller escapement, with an 8° pallet and a lift of 25°, will be the nearest thing to a perfect escapement to a pocket watch, as in consequence of the deep intersection of the guard with the small roller, a safe action is insured, which permits of a shorter locking, and, as the action of the ruby pin in the lever notch takes place, both in the unlocking and the impulse, nearer to the line of centres, there is no danger of the balance setting. In fact, it cannot do so if of a proper size. Thick oil on the pallet planes will have less effect

than with those of a higher angle, and the balance will of course have a longer free arc.

The Swiss make double roller escapements to all their high-class watches, and indeed to a great many that cannot be included in that category that would be a good deal better with something less pretentious.

118. **Cole's Resilient Escapement.**—Another form of the lever escapement (known as Cole's Resilient) was invented by the late Mr. J. F. Cole, about twenty-five

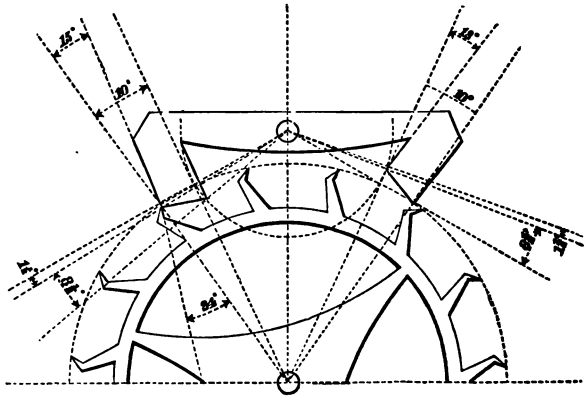

Fig. 33.—Cole's Resilient Escapement.

years ago. It was intended to obviate the evils arising from overbanking. (Fig. 33.)

The escape wheel resembles an ordinary escape wheel acting against the faces of the pallet with the backs of its teeth, the points being bent towards the locking faces. Some of the wheels have been actually made in this manner on account of the difficulty in cutting them. No banking pins are required; after the tooth drops on to the locking face, the supplementary run draws the plane into the wheel as far as the bend in the tooth, which acts as the

banking. In the event of overbanking, the effect of the impulse pin striking the lever would be simply to drive the pallet plane still further into the wheel, when it would slide down the reverse slope of the tooth and cause the wheel to recoil, which (after the force of the jerk was expended) would then force the pallet up again into its place, thus preventing any damage to the escapement, such as the ruby pin or the balance staff pivots being broken, or, at all events, preventing the acceleration in the time of the watch which would be occasioned by the pin striking the outside of the lever on alternate sides and rebounding several times, which it would do were the bankings rigid.

This escapement was much thought of when first introduced, but the danger of overbanking was exaggerated, not one watch in a thousand being injured from this cause; and as the escapement was a little more expensive than the ordinary one, on account of the difficulty of the cutting of the escape wheel, its manufacture was abandoned.

There have been numerous inventions to deal with this fault of overbanking, mostly in the direction of spring bankings, a spring lever, &c., but generally they have introduced faults greater than the one they were intended to prevent.

119. **Cole's Repellent Escapement.**—Mr. Cole was the inventor of another form of lever escapement, which he termed the Repellent, or Anti-detached. The pallets on this escapement differ from the ordinary ones only in having a recoil rest instead of a "draw;" but the lever and roller action is different. The lever is brought up to a narrow point, instead of having a forked end, and gives the impulse through a small notch cut in a small ruby roller against which it rests, while the balance is performing what would be its free arc of vibration in the ordinary lever, being gently pressed by the repellent action of the wheel tooth on the locking, or resting, face of the pallets. Like the previous escapement, this one requires no bank-

ing pins. It approximates to the action of the Duplex, to which it is much inferior, because of requiring a larger roller to obtain sufficient impulse, and for other obvious reasons. It has never been generally made.

120. **The Club-tooth Lever.**—The only other lever escapement in general use, besides the table and double roller escapements, is what is called the "club-tooth" lever. In this escapement the lever and roller action is the same as in the two former, but it differs in the pallet action, the impulse planes being partly on the teeth and partly on the pallet. It is almost universally used in French and Swiss-made lever watches. This form of wheel permits of very little drop being allowed for between the escaping tooth and the next one coming into action on the opposite pallet face (the tooth being cut away at the back from beneath the impulse plane, to free the pallet corner when it is driven into intersection with the wheel); whereas, with the taper-pointed teeth of the ratchet wheel, a small amount of space must be lost. It is also, from its shape, better calculated to retain the oil. But these advantages are more than counterbalanced by the disadvantages attending the action of the two planes in contact, whose surfaces, at one part of the action, are nearly touching one another the whole length of the plane on the tooth; so that, apart from the question of capillarity, any thickening of the oil—the necessity for which to the wheel teeth constitutes the great drawback to the lever escapement—will entirely upset the performance of the watch.

With the sharp points of the brass ratchet-shaped teeth, the points slide down the planes with very little resistance, the action being so light that I have seen many wheels that showed no sign of wear after having been more than thirty years in action.

I have heard escapement makers remark that the ratchet wheel is preferable to the club tooth, because there is less friction; and this is, to a certain extent, true, as the planes diverge more rapidly from each other,

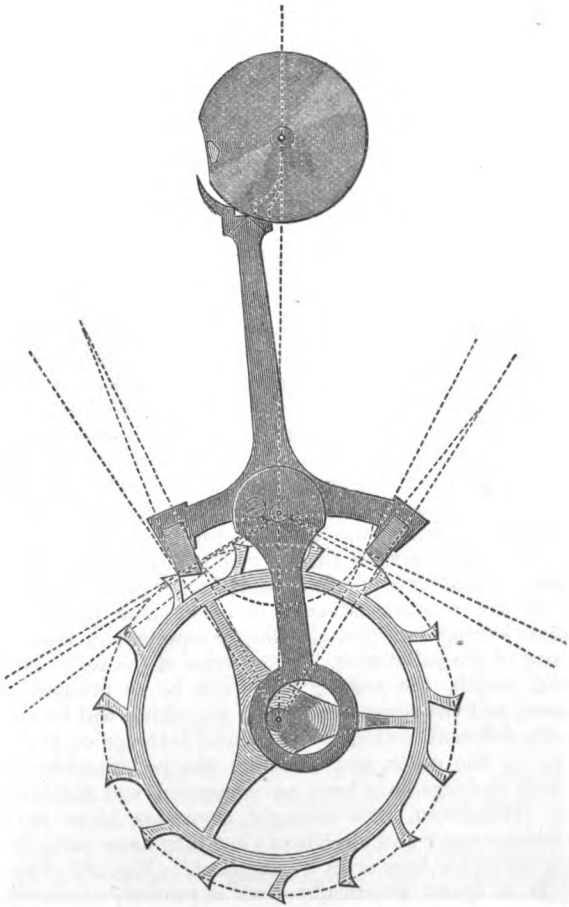

Fig. 34.—Straight-line Lever Escapement, with Club Teeth.

and the angular motion of the part of the tooth in contact increases as it passes over the pallet plane. But it is a mistake to suppose that the extent of the surfaces in contact makes any difference, for anyone with the most elementary knowledge of mechanics knows that the friction would be the same in both instances, other conditions being constant; indeed, friction has very little to do with the retardation of such light bodies, as compared with thick oil, badly-formed parts, &c.

121. **Straight-line Escapement.**—The Swiss attach great importance to what is called a straight-line escapement (Fig. 34), which is never made in England, as, with our fusee movements, it would be difficult to find room for it. It is supposed that there is less friction and shake on the pivots from this arrangement, from the direction of the pressures neutralising each other to some extent; but there is really no advantage to be derived from planting the pallet at any one angle more than another (the parts being detached from one another after the action has taken place), unless, perhaps, it be in the look of it, with its visible stones and fancifully-shaped lever, an advantage to which the Swiss are not insensible.

122. **Pallets with Circular and Equidistant Lockings.**—A difference of opinion exists amongst watchmakers as to the relative advantages of circular pallets and pallets having lockings, circular, or equidistant, from the centre of the pallet-staff. If the arms of the pallet are of equal length, the locking faces will be at unequal distances, and the resistance to the unlocking will be apparently different, owing to the greater leverage on the one than on the other, and therefore the pallets with equidistant lockings have been recommended, and notably by Mr. Grossmann, who strongly advocates them in his admirable essay and elsewhere; but they have never been adopted either here or in Switzerland. (Figs. 35, 36.)

It is found practically that a properly-constructed escapement will perform equally well with either pallets —with equidistant lockings or circular pallets—so that

really there is no reason for changing the latter for the former, especially as the making of the circular pallets is so systematised and well understood by pallet makers;

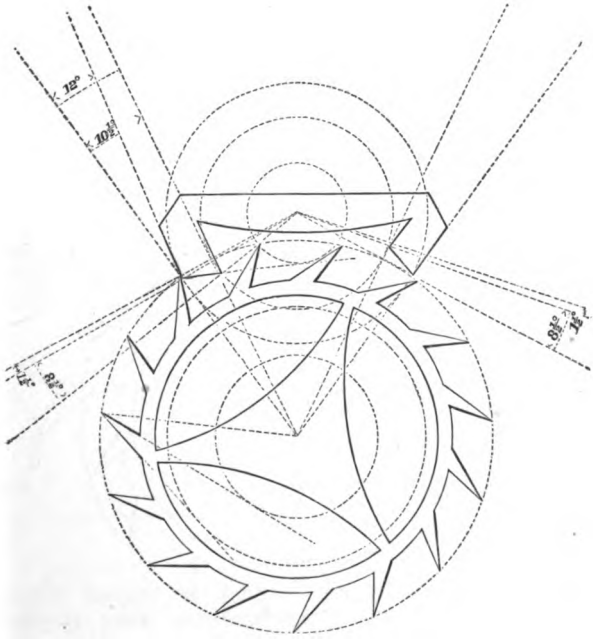

Fig. 35.—Circular Pallets.

but for the benefit of those who are fond of analysing theories, I will endeavour to summarise the arguments for both sides of the question.

Taking first those in favour of equidistant lockings, it can easily be proved geometrically that the friction on the impulse planes of pallets moving through the same lifting angle, where the impulse is delivered tangentially, is the same whatever may be the length of the pallet

arm or its distance from the centre of motion. There is, therefore, no advantage, theoretically, in having the impulse planes circular, or at equal distances from the

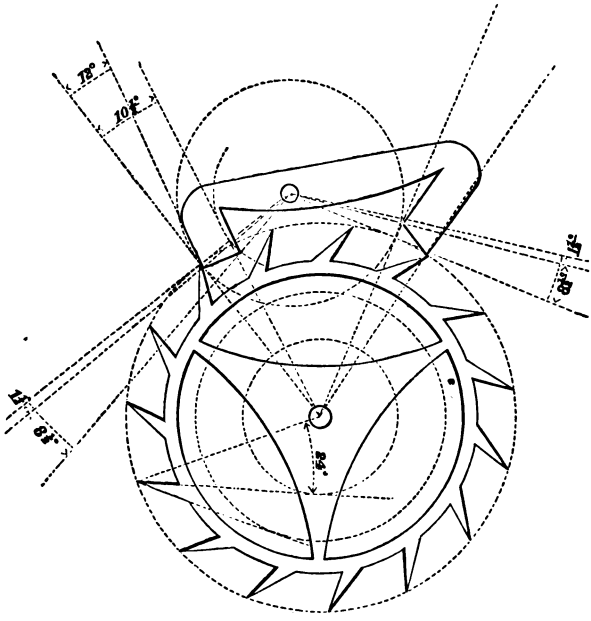

Fig. 36.—Pallets with Equidistant Lockings.

centre. Whereas it is apparently obvious that with the locking faces at unequal distances from the centre, as in circular pallets, there is a greater amount of resistance to the unlocking on the entrance pallet than on the exit. This would be true if the locking faces were circular, as in the Graham "dead-beat" escapement; but as there must be a certain amount of "draw" on the locking faces of lever pallets for safety, the greater amount of recoil thus given

with the one pallet than with the other causes a greater amount of resistance to the unlocking on that face; while the necessity of using oil on the impulse faces considerably modifies the first part of the proposition, in favour of equidistant impulses, as it is obvious that with a longer and more oblique impulse plane the oil will have a greater retarding effect than with a shorter.

It will be seen by consulting the diagram (Fig. 37)

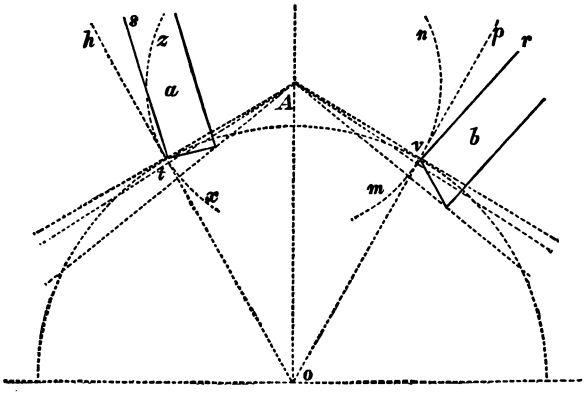

Fig. 37.

that the unequal resistance to the unlocking in circular pallets is more apparent than real. Let *a* and *b* represent the flukes of a pallet having equidistant lockings; *n v m*, *z t x* are arcs of a circle, struck from the centre, A, through which the locking points will pass; and whatever depth the tooth locks, it will be made to recoil to those arcs, as the corners *t*, *v* of the locking faces pass over them when they are drawn out from the wheel; *p r* and *h s* are the angles (12°) of "draw" on the pallet, taken off on the radii *h t o*, *p v o*, from the points *t* and *v*.

It will be seen that, whereas on the left-hand face the

distance the tooth will be made to recoil is only the amount the chord $z\,t$ deviates from the face $s\,t$, on the right-hand face the amount of the recoil is 12° *plus* the

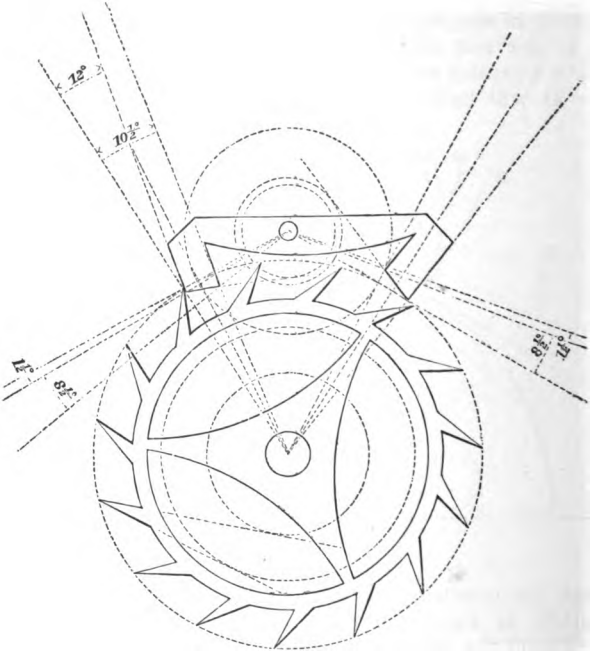

Fig. 32.—Pallets, with Semi-equidistant Lockings.

deviation of the chord $n\,v$ from the radial line $p\,v$. It is evident, therefore, from the above proposition that the amount of resistance to the unlocking is greater on the locking face of b than on that of a, and this may be equalised by either allowing a greater angle of "draw" on a than on b, or by shortening the lever A v. A good many escapements are made with semicircular pallets, *i.e.*,

pallets having neither the lockings nor the impulse planes equidistant from the centre, but between the two, as shown in Fig. 38.

123. **Caliber.** — On account of the difference of opinion of manufacturers as to the correct proportions and sizes of escapements no fixed calibers have been determined upon, some manufacturers preferring them larger and some smaller, &c., owing probably to the fact that they have been found to perform equally well when constructed with widely varying proportions. And as this difference of opinion extends also, as I have before observed, to the calibers of the movements, it is necessary that the escapement maker should understand how to adapt his escapement to these various conditions.*

This want of system, though bad in itself, has tended in its results to develop the true theory of the lever escapement in England, where it is generally better understood than in other countries. Although pallet making is a distinct branch of the business, the escapement maker should be able to make pallets for himself, and to measure that the angles are what they are represented to be.

The size of the escape wheel determines the size of the pallets, which are the groundwork of the caliber of the escapement, and this should have some relation to the size and weight of the balance, which should be determined with reference to the size and depth of the barrel, and, consequently, the strength of the mainspring. With a balance of the correct size, a wheel of from three-sevenths to three-eighths its diameter will be about right.

The numbers denoting the sizes of escapements have no reference to the sizes of $\frac{3}{4}$-plate movements, but are taken from the sizes of movements to which they were applied when full plate watches only were made. When $\frac{3}{4}$-plate watches were introduced, the room for the

* The word "caliber" is applied technically in the watch trade to denote certain conditions, proportions of the parts, &c., and not in its more limited and general sense: thus we speak of a movement of left-handed caliber, a right-handed caliber, &c.

escapement was much more restricted, smaller and heavier balances were used, and the superiority of smaller escapements was demonstrated. The old numbers, however, are still retained, although they do not represent anything, so that what is known as a four-size escapement will be the size for a ten or twelve-size movement ($\frac{3}{4}$-plate), and a six-size escapement for a fourteen or sixteen-size movement.

The wheel and pallets being obtained, the frame is prepared for jewelling.

124. **Steady-pins.** — The steady-pins in the cocks are usually put in by the movement maker; but as these pins, and the holes to which they are fitted, are rarely concentric with one another, and the pins are made of straight wire screwed into the cocks, while the holes are opened with a taper broach, they never fit well. Now, as a badly steady-pinned cock will be always liable to shift, to put the arbors out of upright, and so to destroy the very nice action of a good escapement, the escapement maker has always to resteady-pin the cock himself. There is no reason why the movement maker should not do this work as well as anybody, and no doubt he would, if manufacturers would only agree as to the exact calibers and positions of the parts.

The escape cock is often left by the movement maker without pins, for the convenience of being shifted for a larger or smaller escapement.

If the cocks are not steady-pinned, the soles should be rubbed flat on glass with oilstone dust and oil, and a small square notch filed or cut in their outside edge slanting towards the screw hole, to admit the point of strong tweezers for lifting the cock off the plate.

The holes for the pins should be marked as far apart as the space will permit, and drilled in the drilling tool, with the cock screwed on to the plate in the proper position. The holes and pins should be drilled and fitted one at a time: the holes broached from the cock, and the pins filed in a chuck in a lathe or throw, and not

in a hand-vice, to the same taper. The pins must be short and well-rounded at the points, and driven into the cocks. The brass of which they are made should be of the same quality and hardness as the cock, as if it be much harder the pin will expand in the gilding, and show. If the pins are already in, they should be removed one at a time, and the holes broached, new pins being fitted as before. Cocks steady-pinned in this way will be perfectly tight and immovable when screwed into their places, although easily removed; whereas with straight pins they are never steady, and the difficulty of removing them is a permanent danger to the pivots. There is no cause of bad performance in a watch more frequent than injured balance staff pivots, through the great difficulty jobbers find in taking the cock off and putting it in its place again.

125. **Sinking the Escape Wheel.**—The space between the pillar plate and the lower face of the escape cock may be determined by the thickness of the pallets and the lever, as there will be sufficient freedom for the fourth and escape wheels, if there is room enough for the pallets and lever.

In flat watches the escapement is sometimes sunk in the pillar plate. The only difference in making the escapement in this way is that the escape wheel is run in below the fourth wheel, and the lever is placed above instead of below the pallets.

There is a great advantage in this disposition where there is little room, as the distance between the escape cock and the pallets prevents the latter from drawing away the oil from the hole, which frequently happens when the pallets are close to the cock and too much oil is applied, especially if the holes are brass ones.

If the escape wheel is sunk in the plate, the sink should be bevelled off at its edge, to permit of the wheel being removed when the watch is together; or if the wheel is low in the plate, a slot cut between the two sinks will be better.

If the escape cock is to have thorough holes, it should not be less than ·02 of an inch in thickness; and if it is to be jewelled with end-stones, not less than ·027 of an inch. It should be screwed into its place, and turned down in the mandrel to the required thickness, so that it may be parallel to the pillar plate.

The width of the balance rim will determine the space between the escape and balance cocks, but nothing is gained by keeping the balance cock above the plane of the top plate, and therefore it is best to turn out the freedom for the balance after the cock is jewelled, which is done by cementing the cock on to a piece of brass, and turning out the freedom for the rim and screw heads in the mandrel.

126. **Balance.** — Assuming that the dial is made and that the seconds hole in it has to be worked to, and also that the escape cock is planted in a position suitable to the size of the escapement to be used; if the dial hole does not exactly coincide with that in the frame, the latter must be stopped and another one marked from the dial hole. This may either be drilled or marked sufficiently to work from. By placing the fourth wheel and the escape pinion in the depthing tool, the depth can be ascertained and marked on the bar; the distance may be taken from the balance hole to the centre of the escape cock, and a segment of a circle, cutting the score already made for the depth, will give the exact position for the escape wheel; and when those holes are drilled, the frame is ready to have the balance staff and escape wheel holes jewelled. When jewelled, the balance staff and escape wheel pinion can be pivoted and run into their holes. The balance staff should be all steel, and as hard as it will turn. The proper height for the balance is ascertained by shortening the staff before the pivots are made until the balance is close to the escape cock, as the pivot cannot be shortened much when made.

The balance should fit very tightly on the seat made

for it on the staff, very little of which should be left for riveting; and the shoulder against which it is riveted must be square, not undercut. If this is not attended to the balance will not run true when riveted, and additional riveting will only make it worse. The seat of the balance spring collet should be polished and only tapered a little. The height for the total length of the staff can be got by taking out the jewel holes, screwing the end-stones in their places, and filing a piece of brass to the height between them, allowing of no shake; or a still better plan is to take off the end stones and measure the distance between the outside of the holes with a *douzième* tool. The escape wheel is fitted to a brass collet, or a gold one is better, driven on to the pinion; the height of the wheel being easily ascertained, as it is close to the escape cock.

The seat of the collet should fit the wheel very well, and here, also, very little must be left for riveting, or rubbing, the wheel on to it. Before fitting, the wheel should be put on a true arbor, and, if not true, the hole should be drawn until it is so, and broached round and fitted to the collet.

The roller may now be roughed-out and let on to the staff. The position for the pallet holes being marked off, the distance between them and the balance holes is technically called the chord of leverage, and the escaping arc is entirely dependent on the way in which this chord is divided between the roller and the lever, *i.e.*, the acting diameter of the roller, the acting length of the lever, the lifting arc of the lever (or pallets), the lifting arc of the roller.

If the pallets are 10° pallets—*i.e.*, giving 10° total lift on the lever each way—and the balance is required to have a lift of 30° (a proportion very generally adopted), the chord of leverage must be divided into four equal parts, and the impulse pin in the roller placed at one of these parts from its centre, leaving the remaining three for the effective length of the lever. If the impulse pin

is at a greater relative distance from the centre of the roller (in a table roller escapement) and the escaping arc consequently diminished (*see* page 140 and Fig. 16) the guard pin would not intersect the roller sufficiently to have a safe action; and, therefore, when a short lift at the balance is required a double roller escapement is necessary—a larger roller to receive the impulse and a smaller to insure a safe action.

127. **The Impulse Pin.**—The impulse pin should have about one-third of its circumference flattened off one side (or it may be made a segment of the arc described by the pin, which will be nearly flat in so small a space), and, the distance of the pin from the centre being determined, it should be marked on the roller, a hole drilled and broached to not quite the diameter of the pin, and a punch of the shape of the pin put into the hole with the flat side towards the edge of the roller, the edge of which should be beaten in with the pæan of a small hammer until the hole takes the form of the pin. If the punch be a little taper it can be driven into the hole until the pin fits it. The pin should fit well and not be dependent upon the shellac with which it is fixed for its stability, and it must be perfectly upright.

The roller must be turned to the proper size, and the small crescent in front of the impulse pin filed out to permit the guard pin to pass when the lever is giving impulse. There is no method for determining the outer diameter of the roller, but, with an escaping arc of 30° at the balance, the intersection of the guard pin with it will be very small indeed, and, as this pin must be quite close to the roller when the impulse pin leaves the lever notch, the roller must be turned down as small as possible.

The position of the pin may be determined, with any lift, by drawing a line X B (Fig. 39) at half the angle of lift on the lever to a horizontal line A B, which represents the line of centres. Placing one point of the depthing tool in the hole or marked point B, and the other in the

centre of the roller at C, at the distance of the respective centres apart, the point of intersection of the roller with that line, as at x, x', x'', will give the exact *point* for the guard pin, whose thickness must then be allowed for.

With a one-to-three escapement, as it is called—*i.e.*, one having one part of the distance on the line of centres taken up by the radius of the roller, and three parts by the acting length of the lever—the intersection is found to be half the thickness of the pin; and a very good method of determining the position of the pin, adopted by

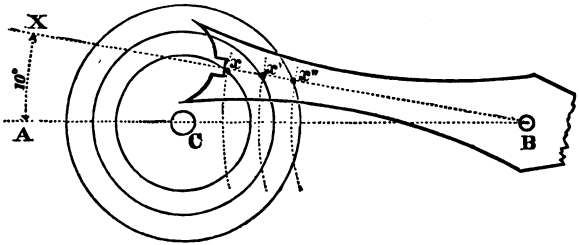

Fig. 39.

escapement makers, is to draw on a piece of smooth brass a series of arcs from the centre of the lever, and placing one point of the depthing tool in that centre and the other in the centre of the roller, the arc which its circumference touches will be the distance from the centre of the hole at which to drill the hole for the pin, so that half its thickness will intersect the roller.

Before drilling the hole for the pin or the pallet staff in the lever it is better to file up the lever fork and cut the notch, and for this reason: the notch must fit the impulse pin without shake and be cut quite square to the bottom, as there is no room to spare, and the guard pin must be exactly in the middle, and it is much easier to mark and drill the hole for the guard pin than it is to file the notch to the hole when that is drilled first.

128. **The Guard Pin.**—The hole for the guard

pin can be marked and drilled as near to the bottom of the notch as possible, and the hole for the staff drilled from it. The lever may be roughly shaped, and, if the hole in the pallets is quite square to the sides, or upright, the pallets and lever should be held together in the spring tongs and broached for the pallet staff; it is well to first put the pallets on an arbor in the turns, and try, by touching the sides with a graver, if they stand square to it; if not, the hole must be broached slantingly until it is square to the sides. Notwithstanding the numerous templets and gauges used for the measurement of the various parts and proportions, it is quite impossible to insure that absolute exactness requisite for the perfect working of an escapement, so that it is always necessary to examine it with the parts together when complete. The roller and lever depth is easily seen in the tool, and can be examined when the lever is let on to the staff, the distance on the plate being taken with the points of the depthing tool on the dial side of the plate and marked from the balance jewel hole with the end-stone removed.

The depth of the wheel and pallets can be marked in the same way; and this cross depth requires to be very accurately determined and the hole carefully drilled, the two actions of the roller and lever and the wheel and pallets being dependent upon its position. The lighter the marks made with the depthing tool, and the smaller the dot or centre to drill from the better, as the smallest deviation from the correct spot will necessitate re-planting.

129. **The Pallet Staff.**—When the pallet staff has been run in, the depths can be tried in the frame, and, as the action of the wheel and pallets is more easily seen in the frame than in the tool, it should be tried first. If the lockings are safe and the wheel will escape forwards, the freedom can be tried by running the wheel backwards, pressing it towards the pallets; if it runs freely the depth will be correct, but if in

going forward the tooth falls on the plane of the pallet, or even on the corner, it will not be safe, and the pallet staff must be replanted, as would be the case where the depth is much too great. Topping the wheel must not be resorted to.

130. **Lever and Pallets.**—The angle of the pallets with the lever may be obtained approximately by moving the wheel forward, and observing if the lever falls more on one side of the balance holes than on the other. The balance should then be put into its place, and if the guard pin passes the crescent, it should just touch the corner as it passes out, the polishing of the edge of the roller giving it sufficient freedom afterwards; and if it stands close to the edge of the roller on either side, when a tooth escapes and the lever has passed the crescent, the escapement —*i.e.*, the lever and pallets—will be what is termed in angle, and the banking pins can be marked while the guard is pressing the roller. The necessary freedom for the guard pin from the roller may be got by either making the roller a little smaller, or the lever a little narrower, where it rests on the banking pins. The position of these pins should always be near the fork of the lever; they should be small, and, if left no longer than the height of the lever from the plate, there will be little danger of their being bent.

If, as is sometimes the case, the lever is just a shade too deep or too shallow on the roller, the hole for the staff may be "drawn" a little. This is done by gripping the lever in the spring tongs or pliers (with brass faces), covering a small portion of the hole on the side from which it is to be drawn. By broaching the hole while held in this manner you make it a little oblong, and it must be punched up a little on the opposite side, as it must fit tightly on the staff.

After both wheel and roller depths have been made correct, the pallets and lever must be clamped or held together, and the holes drilled on each side of the staff

for the pins that are to hold them together. The lever must be filed up, hardened, and tempered. The lighter it is made the better, and it should be made of such a shape that it will not cover the pallet arms and draw away the oil from the wheel teeth. The pallets and lever must be carefully poised; if the pallets are to be made thinner before polishing, they should be put on an arbor in the turns, and have races cut in the sides with a graver, and the sides filed down to these races. A good deep sink should also be cut in the pallets in front of the staff hole, to prevent them from drawing the oil away from it. The back and inside of the pallets are polished in a swing tool, and the sides on a cork; care must be taken that too much pressure is not used and the stones loosened, as a loose stone is a grave fault and not easily discovered. It is best to use a steel polisher with oilstone dust at first, finishing with a zinc polisher and diamantine.

131. **Escape Wheel.**—The escape wheel should be put on an arbor, and the rim turned true on each side to the required thickness, and the arms and centre reduced by a piece of blue stone, as, if either the escape wheel or the pallets are out of poise, it will affect the going of the watch. When the wheel is smooth and flat on the sides, it should be polished; no escape wheel should be gilded. The way to polish a wheel is as follows:—Take a piece of brass, not much larger than the wheel, rub it on glass with oilstone dust until it is quite flat; make a small hole in the centre, and a few circles on it about the size of the wheel, and with a cement made of bees-wax and a small grain of resin, cement the wheel on the block as near the centre as possible; the circles on it being a guide. The wheel may be polished underhand on a tin block filed flat and scraped very clean, by placing the point of a peg in the hole in the piece of brass. Care must be taken that the pressure is equal, as it is very easy to get one side a little more rubbed than the other.

One side having been polished, a very little heat will melt the cement, when the wheel can be reversed, and the opposite side polished in the same way. The cement can be removed from the wheel by heating it in a little clean oil until it is melted, and what still adheres will be easily breaded off.

The polishing stuff used for the wheel should be red stuff (not too fine) as diamantine will not polish brass.

When the wheel has been polished it is ready to be rubbed on to the collet on its pinion, after which the tops of the teeth should be touched true by holding a slip of oilstone against them, and rotating the wheel in the turns. The roller has generally a hollow cut out of it for ornament in the centre, and its face polished on a block. The edge, which is left square, is polished by bringing it into contact with a revolving disc in the lathe, or in the turns. The Swiss make the edge of their rollers round, and in the older Swiss watches they are often found with it tapered off to an angle, in order, it is thought, to avoid friction, in case the guard pin should come in contact with it. But English escapement makers disbelieve in an escapement that would permit of this frequently occurring, and the guard pin is used merely as a precaution against a remote contingency.

CHAPTER XV.

THE BALANCE SPRING.

132. **Invention.**—Perhaps the most remarkable epoch in horological chronology was marked by the invention of the balance spring; its application to pocket watches placing within the reach of everybody the means of regulating and registering the daily actions, &c., with a degree of exactitude quite unattainable with the timekeepers hitherto made.

This invention is generally accredited by foreign

writers to Huygens, who applied for a patent for it in Paris in 1674, in which he was opposed by L'Abbé Hautefeuille, who proved that he himself had applied for the patent some years before. Although Dr. Hooke, whose invention it undoubtedly was, had applied for a patent for it here sixteen years before that time, both of these inventions may possibly have been original, so far as the inventors themselves were concerned. Hooke himself disbelieved this, and he accused the Secretary of the Royal Society (Mr. Oldenburgh) of making known to foreigners the inventions deposited in the records of the society. He did not complete his patent, owing to a disagreement with certain parties with whom he was to have taken it out conjointly (and who afterwards negotiated with Huygens on the same subject), and allowed it to fall through.

133. **Hooke's Law.**—It is to Hooke we owe the exposition of the qualities of the spring (both as applied to watches and otherwise), as it is to him we owe its application; the law of elasticity enunciated by him (see page 18) being an axiom in mechanics with which everybody is familiar. But this law is only partially true as applied to balance springs of watches and chronometers, otherwise every spring would be isochronous. Pierre Le Roy was the first to publish this discovery, although it is probable, from Hooke's genius and the many experiments he made on springs, that he had found this out also. Le Roy says that "there is in every spring of a sufficient extent, a certain length where all the vibrations, long or short, great or small, are isochronous;" and that "this length being secured, if you shorten the spring, the great vibrations will be quicker than the small ones; if, on the contrary, it is lengthened, the small arcs will be performed in less time than the great ones."

134. **The First Spiral Springs.**—The first spiral springs that were applied to watches were hand-made—that is, turned up by hand by means of a

small steel peg or burnishing tool, which, by burnishing one side of the wire, caused it to coil up as a slip of paper will if scraped on one side with a knife. Some of these springs were very beautifully made, and were far superior to the soft tool-made springs afterwards in use, as the burnishing which turned them up also hardened them to a certain extent, and set them in spiral form. As soon, however, as different forms and lengths of the spring were introduced, it became necessary to coil them up on blocks, &c.; and shortly afterwards, as the soft springs were found to lose their elasticity, they were hardened and tempered, and continue to be made so for all high-class watches. Forty years ago every finisher made and applied a spring to the watch he finished, except to a few of the best watches, which were sprung with the above-mentioned hand-made springs, or the ordinary tool-made springs hardened between two pieces of brass screwed together—a very clumsy and almost impossible way of hardening a spring and keeping it in shape. The springs of forty years ago were turned up in a tool, and blued to give them a set; now, very few finishers know anything about either making or applying them.

135. **Different Forms of Spring.** — M. Lutz, of Geneva, discovered a method of hardening springs other than the old process of fire and water, and of imparting a very beautiful appearance to them. He exhibited a case of these springs in the Exhibition of 1851, which afterwards came into my possession, and very charming things they were, in all forms and colours. I believe the Commissioners gave him some assistance to enable him to perfect his invention, but I do not think these springs have been improved upon since then, although the process is still a secret. Great quantities of these springs and imitations of them have come into this country, superseding the old tool spring of the finisher, as they deserved to do, but they are altogether unworthy of a good English watch, although too often applied

to watches receiving that appellation, as they have none of the properties of a properly hardened and tempered spring. Many different forms of spring (Fig. 40) have been in use from time to time, the most successful of which are the Breguet spring, invented by the French watchmaker of that name, and the cylindrical helical, which was the invention of John Arnold the elder, who patented it in 1775. The latter of these springs was in general use for all the higher class of pocket watches until comparatively recently, but since the qualities of

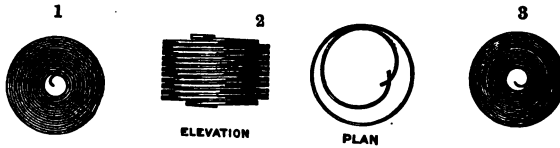

Fig. 40.—1. Ordinary Volute. 2. Cylindrical Helical. 3. Breguet Spring.

the Breguet spring, which is better adapted for the thinner watches now made, have become understood, it has quite superseded its rival in all but pocket and marine chronometers.

136. **Isochronism of Balance Spring.**—A balance spring, of whatever form, to be isochronous must satisfy the following conditions:—Its centre of gravity must always be on the axis of the balance, and it must expand and contract in the vibrations concentrically with that axis. When these conditions are secured in a properly made spring it will possess the quality of isochronism—that is, its force will increase in proportion to the tension, and it will not exert any lateral pressure on the pivots. M. Phillips, in his memoir, demonstrates these conditions, and proves theoretically that the terminal curves deduced with the view of satisfying the one condition verify at the same time the other.

137. **Isochronism and Length of Spring.**—There is a theory, attributed to the late Mr. Charles Frodsham,

that every length of spring has its isochronous point; and Mr. Immisch, in his prize essay, says:—"Every one with some experience of timing knows that mere length has nothing to do with isochronism." In a paper on the subject which I contributed to the *Horological Journal* of June, 1875, I denied this, and asserted that length had everything to do with it—that a spring too short, whatever its form, would make the short arcs of the balance vibration be performed in a less time than the long arcs, and a spring too long would have just the contrary effect, and for this reason. If you take a balance in its place in the watch with a spring of ten turns, a length often prescribed, and move the balance round half a turn, you will find that, while the inner end of the spring, being pinned to the collet, moves round in the same circle as the balance, the outer end being fixed, the disturbance in the spring taking place in the inner coil, has gradually affected the fixed and rigid end, and, in a spring of this length—especially if it is a hardened spring, and therefore more elastic—the maximum resistance has been reached, or nearly so. Therefore, if you move the balance another quarter of a turn in the same direction, you have added little or nothing to the resistance, and the spring has not force enough to throw the balance back through the longer arcs in the same time that it would have gone through the shorter. A spring with ten turns is, therefore, too short, and in consequence a watch with a spring of that length will gain in the short and lose in the long arcs. Now, take a spring of twenty turns and go through the same operation, and you will find that the balance must be moved through more than the half-turn to disturb the fixed end of the spring; but as the spring is more than double the length, it is also thick in proportion, and when the disturbance reaches the rigid end, it exerts a force sufficient to carry the balance through the longer arc in a shorter period than before that force was called into action. A flat spring with ten turns is, then, too short, and one with twenty too long; for a spring

with ten turns will make the watch go fast in the short arcs, and a spring with twenty turns will make it go slow in the short arcs.

138. **Compensation.**—The compensation is not much affected by any difference in the lengths of the springs, there being a compensating power in their expansion and contraction by which there is a gain in favour of the spring, so far as concerns its dimensions, and it is only the *difference* in the loss of elasticity between the two which has to be compensated for, as was pointed out recently by Mr. Wright, the lecturer at the Horological Institute. This is in accordance with the law that the resisting power of a spring varies as the cube of its thickness, and as the spring expands equally all ways, it would become actually stronger with any increase of temperature, were the elasticity unaffected by the change which takes place in the molecules, and this difference of elasticity in springs of different lengths is very small.

My friend Mr. Mercer, who, from his large experience in chronometer timing, may be considered an authority on the subject, tells me that in many instances he has not had to touch or alter the weights on changing the springs, and that, at all events, it is not certain which way the alteration of the compensation would be required.

139. **Flat Springs.**—I find the best length for a flat spring to be fourteen turns, and if it is half the size of the balance, and pinned in properly, the time will be pretty near in positions. But although the flat spring is the most common, it is also the worst form of spring. It cannot expand on the side next to the stud, but has a dragging lateral action, while it throws out on the opposite side to a third more than its proper size, causing considerable pressure of the balance pivots on each side of the holes alternately.

It will assist the action of this spring if it is always a little small, as this gives more freedom to that portion of the coils next the stud.

140. **Correcting the Spring.**—I have seen directions by experienced men how to time in positions by the curb pins. This should never be attempted.

The curb pins (always an evil) should be wide enough apart to let the spring just move between them, and no more, and should never be far from the stud. As "manipulating" the curb pins, as it is termed, is done only with the object of lengthening or shortening the acting length of the spring, this should be accomplished in the proper way at once, by adding to or taking away weight from the balance. Should the watch with the spring referred to gain a few seconds in the short arcs, taking up the spring half the width of the stud, and replacing two of the balance screws with heavier ones, will remedy this defect. However, should it do the reverse —that is, lose in the short arcs—by taking a very little off the weight of the balance, and letting the spring out so much, the error will be corrected—if the error is in the spring—but no directions will enable any one to make a watch go well with bad pivots, bad holes, and large and bad escapements. The Breguet spring, although differing very little in form from the simple volute, is essentially different in action and principle; the overcoil, being fixed above the spring, and nearer the centre, gives it perfect freedom to expand in a circle all round. This spring must be longer than the flat spring, as the force of the outer or fixed end is sooner reached, and the curve inwards gives it more power of resistance, and also an easy and perfect means of obtaining isochronism. I find about twenty, according to the size of the watch, the best length for this spring, and curb pins should never be used with it, if perfect timekeeping be aimed at.

I would also warn any one against altering the shape of the balance staff pivots; there is only one shape for these pivots, and spoiling the pivots is not isochronising the spring. This remedy is almost as bad as putting the balance out of poise to obtain time in positions. My theory is length, and length alone, and

this seems to me to be in perfect accord with the result of a good many experiments on this subject, most of them pursued unconsciously; as, for instance, the tapering of the wire before making the spring, and, again, in the contrary direction, when what was termed the isochronous stud—that is, a long spring stud—was used. I have actually seen these two remedies applied to one watch, when the result desired might have been obtained by a spring of the proper length. The difficulty of getting the short arcs sufficiently fast is much increased in small watches, owing to the comparative thickness of the staff pivots, while in marine chronometers the trouble is usually to get them slow enough, the pivots being relatively smaller; but this difference may not be entirely due to the pivots, the conditions under which the long and short arcs are tried in chronometers and watches being different. Mr. Crisp tells me that the late Mr. Charles Frodsham had his marine chronometers timed in positions, and that in some of those he timed for him he found the tendency to lose in the short arcs the same as in watches, proving that the side friction on the pivots has a good deal to do with it. Various materials have from time to time been tried with a view to the prevention and lessening of the compensation error. The first Mr. Dent had some ordinary steel springs electro-gilded, but, as might have been expected from the different natures of the metals, such a combination did not answer. The gold did not adhere well to the steel, but peeled off in places, possibly owing to the different expansion of the metals. Glass springs have also been tried by more than one maker, but with little success. Mr. Dent made a number of experiments on them, but with no other result than to demonstrate that they were quite impracticable. There was one of these springs in a chronometer (going) at the Exhibition of Scientific Apparatus at South Kensington (1876), of which a member of the firm of E. Dent and Co., speaking at the Conference, said:—"This glass

spring is the invention and handiwork of the late Frederick Dent, and the chronometer before us represents the only perfect specimen now in existence. The elasticity and strength of this spring are so extraordinary that until you had examined it you could scarcely credit its being glass. . . . . But meanwhile, for illustration, we will tell you two experiments, the second one being quite unintentional. In the first, a chronometer was taken, having an ordinary steel spring, the balance of which was oscillating 180° from rest. A glass spring was substituted, everything else remaining exactly the same. The oscillation of the balance rose to 200°." The unintentional experiment was that the chronometer to which this spring was attached was accidentally knocked off a table, and, although the staff pivots were broken, the spring sustained no injury.

The same gentleman said this chronometer had always a tendency to accelerate or advance upon its rate, and referring to some experiments on chronometers with springs of different materials, with glass balances, he said, it was found that, while one with an ordinary steel spring lost six minutes twenty-five seconds a day in a rise of 68° Fahr., the one with a glass spring lost forty seconds only.

141. **Glass Springs.**—If glass could be made to answer as a material for balance springs, it would be a matter of the greatest importance to the trade. We should get rid of all our troubles with the compensation balance; in fact, we should not require compensation balances at all for ordinary watches, glass undergoing only about a tenth part of the change for variations of temperature that steel does. The error of six minutes in twenty-four hours in a range of 60° Fahr., for which we have now to compensate, would be reduced to little more than half a minute, and all our disputes about secondary errors, and the best form of auxiliary compensation, set at rest. The discovery of a metal suitable for springs, and possessing the same amount of indifference to

thermal changes as glass, would create a revolution in the trade, and prove a fortune to the finder. Glass springs, owing to their want of elasticity, have to be made quite double the length of steel ones, and, from the great difficulty of making and applying them, have never been made, except for the sake of experiments like the foregoing; and they could not for the former reason be applied to pocket watches, where the space is so limited.

142. **Palladium Springs.** — Great advantages are claimed for the palladium springs introduced by M. Paillard, as they cannot become rusty, are non-magnetisable, and maintain their elasticity better in varying temperatures than gold or steel ones. The compensation error is certainly less with a palladium spring than with a steel one, and immunity from rust is of great value, as the smallest speck of rust on the spring will destroy the rate of the best chronometer; to obviate this, gold springs have sometimes been used. The late Mr. Jürgensen, of Copenhagen and Locle, advocated gold springs, and, some years ago, sent two ships' chronometers to Greenwich for trial so sprung, but the result was not satisfactory, as they stood low on the list. The specific gravity of gold is greater than that of steel, and its loss of elasticity greater in a given range of temperature, and, as gold springs must be formed by an annealing process, they are inferior even to the hard-drawn steel springs that were made before fire-tempering was introduced, in every respect, except their unmagnetic and non-rusting qualities.

The loss of elasticity in a given range of temperature being less in palladium than in steel springs, and the so-called middle temperature error being consequently reduced, has induced several chronometer makers to apply them to chronometers intended for the Greenwich competition, and chronometers with ordinary balances (without auxiliaries) have held a very good place in these trials. But, while chronometer makers should pay every attention to attempts to obtain a better material for the balance

spring, it would be rash indeed to discard the well-proved hardened steel spring, with its known good qualities, for any material, however promising, without very long and exhaustive tests of its qualities. The old soft tool and hand-made steel springs were found to lose their elastic force after the watch or chronometer to which they were applied had been a few years in use, and the instrument fell off from its rate in consequence, and, since there is no change in the molecules of a palladium spring to permanently set it, such as is undergone by a steel spring in the hardening process, it is possible that this spring may, after a few years, also lose its elasticity. Like all soft springs, it also requires very careful handling to avoid bending it so as to give it a permanent set in any but the right shape.

As to its unmagnetic property, that would be of very little use where the ordinary compensation balance is used, as any magnetism which would affect the spring would assuredly reach the balance and equally interfere with the performance of the instrument, and any chronometer or watch made with the object of preventing this would require a balance, as well as the other quick-acting parts of the escapement, of gold or some other unmagnetic metal.

143. **Demagnetising Steel Work.**—For the following description of an approved method of demagnetising portions of the steel work of watches which may have become magnetised, I am in debted to my friend, Mr. Latimer Clark.

Watches sometimes become magnetised by being brought too near to a magnet or dynamo-machine; in fact, persons often injure the performance of a watch by playing thoughtlessly with a common magnet. If the watch be taken to pieces, the separate parts may be demagnetised without much difficulty. If we take any short piece of steel and approach one end very near to one of the poles of a magnet, it will become strongly magnetised; if we make the other end approach, *but not quite*

so closely, the magnetism will be reversed in direction, and will at the same time be somewhat weaker than before. By repeating this process, always increasing our distance, we can rapidly remove all traces of magnetism. The simplest way to do this is to lay a small bar magnet on a divided rule, and holding the piece of steel in a brass or wooden pair of pliers, we approach one end within one-sixteenth of an inch, then the opposite end within one-eighth, then the other within three-sixteenths, and so on till we get to a distance at which the magnetism disappears.

We can readily test this by magnetising a portion of a very small sewing needle, and suspending it by a delicate fibre of silk within a glass tube or bottle. Our piece of steel if magnetised will attract this needle with one end and repel with the other; if not magnetised both ends will attract similarly.

The balance of a watch, being in the form of an S curve nearly closed, cannot be so easily treated, and the same is true of the spiral springs. To demagnetise these the best plan is to mount a horse-shoe magnet on a lathe so that its poles rotate in a *vertical* plane; the poles should preferably be at least an inch apart, and the magnet should be well magnetised. The balance is supported by means of a piece of cork on a small revolving turn-table which rotates in a *horizontal* plane; this turn-table is carried on a wooden bar held in a slide-rest so that it can be slowly advanced up to the magnet and withdrawn. The turn-table is rotated by a kind of overhead motion fixed on the lathe table—this may be a round wooden rod with a pulley at one end driven from the lathe-head, while an india-rubber band traverses along it and drives the turn-table. Both the magnet and the table being set in rotation, the balance is brought up to the poles of the magnet by the slide-rest, and as nearly in contact with it as safety permits—it is then *very slowly* withdrawn. By this process every part of the balance is magnetised and demagnetised in every con-

ceivable direction, but the magnetism becomes weaker and weaker every moment, and ends by being so feeble that it is not injurious. The parts of a watch that require most attention are of course the balance and the pallets, but it is better to treat the balance spring also; this last may be held on a cork by shellac solution and afterwards cleaned in alcohol.

If we have command of the current from a dynamo-machine or from a very large battery so as to make a powerful electro-magnet, we may treat the watch in this fashion as a whole, without the necessity of taking the parts asunder.

CHAPTER XVI.

SPRING MAKING AND APPLYING TO WATCHES.

144. **Testing Spring Wire.**—Before setting about spring making the wire should be tested, and if it will not harden at a cherry red, be rejected at once, as it will require more heat to harden it when in the box or on the block. There is great difficulty in getting good wire for spring making, especially for small springs. The constant annealing required to make it soft enough to be drawn so fine decarbonises it, and makes it so mild that it will either not harden at all, or only at a heat that is utterly destructive to its qualities as a spring. As I recommended in a lecture delivered by me at the Horological Institute, in 1877, the wire, when too mild, should be placed in a vessel filled with charcoal, and heated in a furnace until it is sufficiently recarbonised, in the same manner as steel was originally made, any difference in the relative hardness of the outside to the inside being rather advantageous than otherwise. If it is attempted to make springs of mild wire it will be found that the springs will stick to one another in the

winding-box when they are hardened, and the wire will scale, owing to the excessive heat to which it has been subjected, and will be very difficult to polish afterwards.

145. **To Make the Winder.**—Take a piece of brass or German silver, about the eighth of an inch thick; drill a hole in the centre, and turn it out in the mandrel to about $\frac{3}{8}$ of an inch in diameter, in the form of a small watch barrel. This is called a spring-box.

Fit a lid to it, also with a hole in the centre; turn down a piece of brass wire with a pivot and shoulder to fit the small hole in the box, to project a very little way through it (it should project through the bottom of the

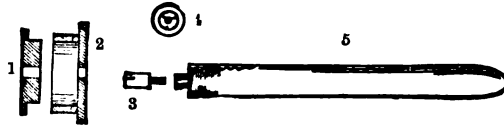

Fig. 41.—1. Box-cover. 2. Spring-box. 3. Screw for fixing Wire. 4. Plan of Winder-pivot. 5. Winder.

box the exact width of the wire to be used for the springs).

Tap a small hole in the centre of this winder-pivot, and cut three thin slits in a triangle to receive the ends of the wire of which the springs are to be made (Fig. 41, No. 4). Drill three holes at equal distances through the rim of the spring-box, close to the bottom, through which pass the wire, and fasten the ends with the screw (No. 3) into the slits in the winder.

The head of the screw should project through the hole in the cover. Now the cover is to be put on, and gently pressed down during the process of winding the spring up, until the box is quite full, when the ends of the wire must be cut off, the screw removed from the centre, and the winder taken away. Bind the cover down with wire, stop the hole in the centre (animal charcoal and soap will do for stopping), and harden the whole in the usual way. Water is better than oil for

this purpose, and mercury better than either, as the lower the temperature at which they are hardened, the better will the springs be. If the box is now put into a small vessel filled with oil (an old metal spoon will do), and held over a spirit lamp until the oil just catches the flame, and then left to cool, the springs will shake out of the box quite easily, and you have now three springs which, even in this state, are superior to the so-called hardened and tempered springs of Swiss make. If the air is effectually excluded, the process of hardening will not discolour the steel much, nor will the tempering in oil, and very little time is required to polish a spring carefully made in this manner.

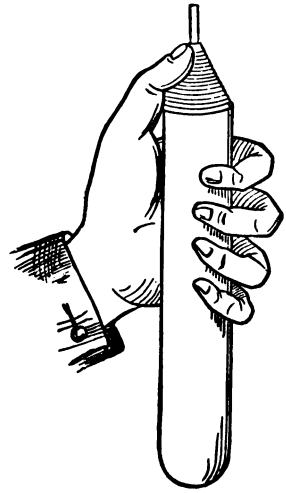

Fig. 42.—To polish Outer Sides of Coils.

146. **Polishing the Spring.**—Take a piece of wood or large pith, make it into a cone at one end, put a pin into the end to project half an inch; put your spring over this pin, and draw the outer end of the spring over the cone with the thumb of the left hand, as shown in Fig. 42, and with a well-worn brush, well charged with red stuff, you will, in a few minutes, polish the outer sides of the coils, turning the spring when one side is polished, and repeating the process. The inner sides of the spring are more difficult to polish, and require care and practice.

If the spring be placed on a piece of flat cork, and a finely-cut peg be inserted through the centre, and pressed firmly on the cork, the spring will take the form of a cone (see Fig. 43), and by moving the peg, with plenty of

red stuff on it, backwards and forwards, and also in a lateral direction, the inside of the spring will be polished in a few minutes. Care is necessary not to bend the spring, as if bent ever so little in the polishing it is useless. The flat edges of the spring are polished on writing-paper rubbed over with red stuff, by pressing the end of the middle finger on the spring, and moving it gently in a circle. Cork or pith may be used for this purpose, instead of the finger. Wash the spring in benzole, and it is ready to blue. Care and experience are necessary to blue a spring well, but the practice will repay the time and trouble.

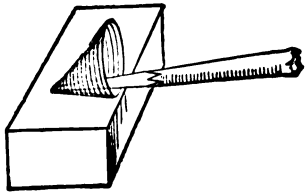

Fig. 43.—To polish Inner Sides of Coils.

147. **Breguet Spring.**—The tool for making the Breguet spring must be somewhat different, as only two of these springs are made at a time, to allow of the proper number of coils; so all that is wanted is a slit cut across the pivot, or small part of the winder (Fig. 44). The pivot should project a quarter of an inch through the box, and two, instead of three, small holes should be made in the side of the box. The wire, to give the requisite number of turns in the flat spring, in a given size, must be flat and broad; but when two only are made at a time, the wire should be very little flattened, or the coils of the spring will be too close together; although I do not recommend this, it being preferable and more usual to make three at a time, and to use the flattened wire.

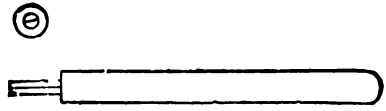

Fig. 44.—Winder for Breguet Spring.

148. **Applying the Spring.**—The spring can now be applied to the balance, without being pinned to the

collet, but merely sprung on, as the centre should be small, and the time of the vibrations counted. It will then be seen if the spring is of the exact size and strength, and if so, it should be pinned in so that the inner and outer ends terminate in the same radius, forming a complete circle, or at "equal turns," as it is called. The vibrations of the spring are counted by taking the outer coil in a pair of tweezers, and holding it up until the lower pivot of the balance is just resting on the board paper, giving at the same time sufficient motion to the balance to make it vibrate the time required for counting; but an experienced timer is able to tell almost at a glance by the distance the weight of the balance stretches the spring, when the outer coil is thus held up, whether it will do or not.

149. **Pinning on the Spring.**—In all springing great care is necessary in pinning the spring on the collet. Always broach the collet hole before pinning in, and see that, in the case of a flat spring, the hole is parallel with the collet, and properly chamfered at both ends, that the pin has a flat side, and that the spring is not permanently pinned in till it is nearly true, for when once on the collet, much difficulty is experienced in bending the centre inwards. Put the collet on an arbor, and in the callipers you will see if the spiral is quite true; if not, bend it gradually until it is so. By putting the arbor in the turns the spring can be got flat. If it is required to make an overcoil or Breguet spring of this, after having ascertained by counting the beats that it is the right strength, proceed to turn up the overcoil as follows, and be careful not to get the spring out of flat or truth in the operation, as it requires great skill to get it either flat or true after the outer coil is turned over. Make a piece of brass wire into the form of the stud of a sprung-under watch, driving the other end into a small handle, and when you have drilled, broached, and chamfered the hole, take the outer coil of the spring through this hole and fasten it with a flat-

sided pin opposite the hole in the collet. The outer coil can now be bent over the top any height it requires to be, and also inwards to suit the stud, without touching the other parts of the spring; and with two or three pairs of tweezers of different sizes, properly made with convex and concave faces, a little practice will enable you to make a very nice curve, when, if pinned in so as to terminate just where the centre springs from the collet, it will give the best results. The overcoil should be turned up not less than a full turn, being bent upwards and over in a very flowing curve; the sharp bends or angles frequently seen in springs of this form applied to Swiss watches should be carefully avoided.

150. **Caution about Breguet Spring.**—A Breguet spring should never be applied to a watch with an index. It is perhaps the best form of spring for a pocket watch, having all the properties in action of the cylindrical spring, and the great advantage of flatness in form, but any attempts at producing a good timekeeper with this spring and index pins will end in failure. And any attempt at getting time in positions by pressing the outer coil of the flat spring against the outer or inner pin is mere jobbing, and, even if successful, would require to be repeated every time the balance had to be taken out.

For flat springs with indexes I would strongly recommend the plan of pinning a spring into the collet, in order to get the stud hole and index pins to correspond.

The end of the overcoil of a Breguet spring should run into the hole in the stud before being pinned in, and if the stud is screwed into the cock without the balance it will easily be seen if the jewel hole is in the centre of the hole in the spring collet, as it should be. This spring should also be pinned in at equal turns.

151. **Chronometer Spring.**—To make a cylindrical spring for a marine chronometer:—Take a piece of round brass or German silver (the white metal stands the heat best), of about five-eighths of an inch in length;

drill, and broach out a hole in it to about three-eighths of an inch in diameter, and turn it true on an arbor to about half an inch; this is the usual size of an ordinary "two-day" chronometer spring. Determine the number of turns you require and the space you wish them to occupy on the block, leaving it long enough to have a little plain space at each end after the spiral is cut; send it to a fusee cutter with a piece of the wire you are going to use, and have a groove cut to fit the wire, not too tightly, and not deeper than half the thickness of it, to take thirteen turns. If on examination this spiral be found perfectly true, drill two holes opposite each other, at the outside of the grooves, large enough to take a good strong screw, and tap them for a *left-handed* screw. Ascertain the length of wire the spring will take and cut it off the bobbin, as it will not in that way be so liable to injury from twisting, etc. The best way of winding the wire on to the block, is to put an arbor that will take your block into a mainspring winder (either a clock or chronometer spring winder will do). The block should be fixed on this arbor with a screw, as it is liable to slip round. Make one end of the wire fast to the block, and attach a good-sized hand-vice to the other. The weight of the vice will keep the wire straight and enable you to wind it on to the block flat and tight; when full, fasten the other end with the opposite screw. You here find the advantage of the left-handed screws, which draw the spring tighter, whereas right-handed ones would push it loose on the block. Use brass screws, as they do not become hard and so break in the holes. Some springers use brass tubing for their blocks, but this is bad, as you cannot broach it true. The block should never be thick, as, if so, it requires to be made so much hotter to harden the spring. It must now be covered with a thin piece of sheet copper or platinum, but any metal that will not melt will do, though platinum is best, as it lasts longer, and saves the trouble of making new covers so often. Holes must next

be made in the covering for the two screw heads, and bound round with fine binding wire; it will then be ready for hardening. Make a good coal fire in a grate, and, when it is well burnt, put a tin or iron box filled with charcoal on the top; this is less expensive than filling the grate with charcoal. When red-hot, the charcoal will give out a slow, even heat, not too fierce, so that you will see exactly what you are doing. When the spring is at the required heat (a dull red), plunge it into cold water—*cold, and plenty of it.* On taking off the covering, the spring will be found to be a little loose on the block; this looseness will not be prevented by using a steel block, as the wire cools much sooner than the block, and consequently retains its diameter at the instant of the spring cooling. Now undo one of the screws, draw the spring tight with your fingers and thumb, and make the screw fast again; the end of the wire may break off, but the left-handed screw will hold the end of the spring tight.

The spring should be tempered by blazing in oil while on the block, as before directed for watch springs, and allowed to cool; it should then be perfectly true and white. The outer edges should be polished by putting it on a piece of pith or soft wood that will fill up the spring, and, while keeping the thumb on the lower end of it, brushing it upwards with a short-haired brush, charged with coarse red stuff. The inside and inner edges may be polished on a cork with a piece of wood and coarse red stuff, or fine emery, and the outside on the block on which it has been hardened on an arbor in the turns; it should then be well cleaned in benzole, and brushed, when it will be ready for blueing. The greatest care and cleanliness are necessary in hardening and tempering a spring, and, above all, it should not be made too hot. I am satisfied from experience that a chronometer having such a spring will have little tendency to gain on its rate, as chronometers usually do when the springs are made too hot, however much they may be let down afterwards. A chronometer does not

gain on its rate, as is generally believed, in proportion to the hardness of the spring, since, were this so, there is no reason why practical men should not have found the exact temper of a spring at which it would neither gain nor lose on its rate. It is known, however, that a spring not hardened and tempered loses on its rate, and one hardened and tempered usually gains, and hence the theory.

152. **Blueing Springs.** — There is no advantage gained by blueing a spring; it is not thereby kept free from rust. Indeed it is said that steel, when blued, is in a state of incipient oxidation, and it is known that the blue spring is more frequently found rusted in ships' chronometers than the bright portions of the escapement; but as it is customary to blue springs, I will explain how it is done. The best way to blue a cylindrical spring is upon a block kept for the purpose, and not used for hardening. The block should be solid so as to heat slowly, and the grooves be cut very shallow, and not fitting the spring too closely, in order that the air may have access to all parts of it. The spring should be fixed with screws, as if for hardening, and the block be placed on end upon a blueing pan over a spirit lamp. If the parts of the spring nearest the pan are colouring more than the upper part, the block must be turned upon the opposite end. Every part of the apparatus must be dry and hot before commencing to blue, and above all things it must be clean, for the least particle of oil or dust will prevent the spring from blueing evenly. Covering the block with a short length of glass tube will prevent external air currents from affecting the spring, and will keep the temperature uniform within the tube. When the spring is the required colour, set the block down to cool, and, if the spring has been well polished, it should be a very bright blue.

153. **Applying Spring to Chronometer.**—The spring being finished, the most important part of the work has to be done, namely, applying it. If the ends of the

spring that have been in contact with the block screws be nipped off, you can proceed to bend in the ends for the stud and collet. You must have pliers with concave and convex sides, having pieces of brass pinned or soldered inside them; these pieces should be segments of a circle, and turned parallel, so that in bending the ends inwards they may be kept flat, and not bent upwards or downwards, as pliers filed this shape would certainly bend them. More than one pair should be used, with different curves or segments, so that the spring may be bent gradually and not more than is necessary. The hole in the spring collet (which is now seldom made by springers) should be about half the distance between the centre of the staff and the inner side of the spring.

With the collet on a broach, the hole should be opened from the right-hand side, not parallel with the collet, but a little upwards, to suit the direction of the spiral. Pin the spring on temporarily, and if it is out of truth, unpin it as often as it is necessary to make any material alteration in the form of the curve; when nearly true, make the pin a proper length, and pin the spring in tightly.

The pins should be made with care, round, and as near the taper of the holes as possible, with about one third filed off the side, the flat side to go next to the spring, and the hole should be chamfered at both ends. By putting the collet (and spring) on an arbor in the turns, you will see where the spring is out. It wants careful bending; always bend it inwards, until it is quite true; if it is bent too much, and the curve has to be straightened, the spring will be spoilt. The collet should now be put in its place on the staff, and the balance in its position in the chronometer frame. If the curve is of the proper shape (it should occupy three-fourths of a circle, and be at the end about half-way between the centre of the staff and the outer circle of the spring), mark the stud where the spring touches it, and drill your hole there; the spring will then

run into the hole, and if you broach the hole (as in the collet) at the angle of the spring, you will have it true and upright without any more bending, which should be avoided as much as possible.

My reason for prescribing a length of thirteen turns is that such a spring, besides having a freer action, will be isochronous when pinned in at equal turns, while a shorter one—say of ten or eleven turns—will require to be pinned in about a quarter of a turn short of equal turns, the extra length, for the reasons given before, not requiring any difference in the compensation.

As there is no difference between the springs for a marine and for a pocket chronometer, except the size, the method of making the latter is precisely similar.

CHAPTER XVII.

THE COMPENSATION BALANCE.

154. **Middle Temperature Error.**—After the inventions of Earnshaw and his contemporaries had brought the ship's chronometer to great mechanical perfection, it was discovered that, though the ordinary compensation balance (Fig. 46) afforded an adjustment for a limited range of temperature so near that it was difficult to detect or record any difference, if the chronometer was subjected to a wide variation of heat or cold, a very serious deviation from its rate would be the result. The deviation was found to be constant, and was this, that if a chronometer be adjusted for two given degrees of temperature, say at 30° and 90° Fahrenheit, and is going to mean time at each of those degrees, it will gain two to three seconds a day at 60°. This method of adjusting the chronometer at two extremes of temperature and dividing the error in

the balance, gave rise to some confusion of ideas, and the error was termed the "middle temperature error" by watchmakers; most illogically, however, as the error is greatest in extremes. It was found that it arose from the compensation weights of the balance not moving towards the centre fast enough in heat; and a theory was advanced, and was for a long time adhered to, that the balance spring lost its elasticity in heat in an increasing ratio. It was conjectured, however, that the error arose from some inherent incapacity of the balance, in the movements of its compensation weights to and from the centre, to accord exactly with the loss or gain in the elasticity of the spring in heat or cold.

155. **Berthoud's Experiments.**—F. Berthoud found by experimenting on a chronometer with a plain balance, that it lost, in a range of temperature of 60° Fahrenheit, six minutes and a half in twenty-four hours; but he does not appear to have made his experiments with a view to ascertain if the loss was equal for equal increments of heat, but to find its total amount, and to determine how much of it was due to the spring, and how much to the balance. He calculated the loss as follows:—

Expansion of the balance	62	seconds.
Loss of the elastic force of the spring . .	312	„
Elongation of the balance spring . . .	19	„
Total	393	„

At a later period the late Mr. Charles Frodsham obtained a result nearly corresponding with this. Now, as the results show the loss from the inelasticity of the spring to be more than five times as much as that arising from the expansion of the balance itself, it is evident that the attention of chronometer makers should be kept directed to this point in their efforts to correct the error. It is obvious that if some material could be discovered applicable to the purpose, that would retain its elasticity for a sufficient length of time, and be less sensitive to

changes of temperature, both the primary and secondary errors would be greatly reduced.

I have already stated the unadvisability of any ill-considered change of material for the springs of watches, but perhaps the palladium alloyed springs may at a future time come into use for marine chronometers, when the method of drawing the wire and setting them in shape of an equal hardness, etc., has been more fully developed.

156. **Effect of Temperature upon Springs.**—Taking it for granted that the elasticity of the spring varies inversely with the temperature, and that the weights, or virtual radius of gyration, move in and out in the same proportion, it follows that the moment of inertia (which should follow inversely as the square of this radius) will not increase sufficiently fast in heat nor decrease sufficiently fast in cold.

Sir E. Beckett shows this mathematically thus :—

Let r be the distance of the compensation weights from the staff or axis of the balance, and let us call them both together M; for this purpose we have nothing to do with the rest of the balance. Let dr be the increase of distance of the weights for some given decrease of heat. Then the new moment of inertia of the balance will be M $(r^2 + 2r\,dr + dr^2)$, and the ratio of the new inertia to the old will be $1 + \frac{2\,dr}{r} + \left(\frac{dr}{r}\right)^2$; and now the term $\left(\frac{dr}{r}\right)$ is too large to be disregarded as it may be in the similar formula for pendulums, because dr must be larger in proportion to r than it is in a pendulum.

Again, the ratio of the moment of inertia for an equal increase of heat to its amount of inertia in the middle state will be $1 - \frac{2\,dr}{r} + \left(\frac{dr}{r}\right)^2$ assuming that equal successive increments of heat produce equal variations of r, which, however, is not quite the case, as it is in pendulums. Consequently, the increase of moment of

inertia for a given rise of temperature is less than its decrease for an equal fall by 2 $\left(\frac{dr}{r}\right)^2$, or the compen-

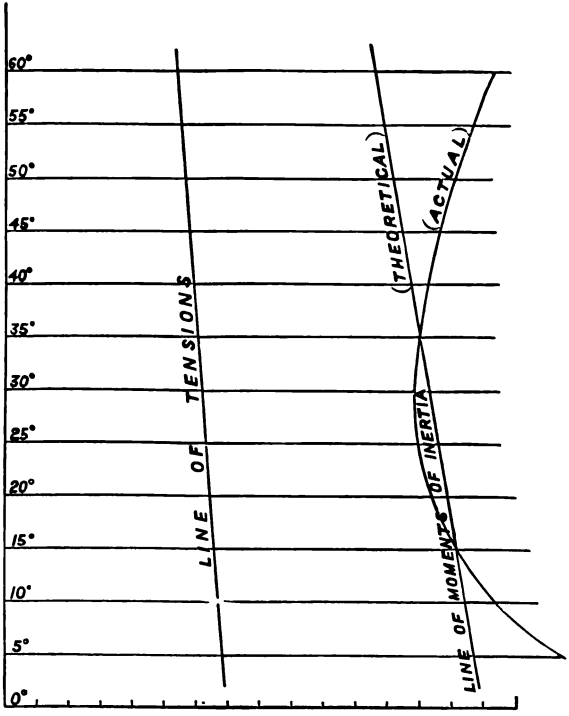

Fig. 45.

sation fails to that extent in one of the three states of cold, middle, or hot temperature.

Mr. Rigg, in a paper read before the members of the Society of Arts, Feb., 1879, says :—

"It is not evident, without a little reflection, why

the error is a gain at temperatures between those for which the adjustment has been made, and a loss at temperatures both above and below that range; but the figure [Fig. 45] will at once show that such is the case. Assume the chronometer to be adjusted for 15° and 35° Centigrade; take two axes of co-ordinates, and let points on the vertical axis indicate temperatures; through these points draw horizontal lines parallel to the other axis of co-ordinates. If distances are measured along the lines corresponding to 15° and 35°, to indicate the tension of the balance spring, and a line be drawn through the points thus determined, the tension at any temperature will be ascertained, on the assumption that it varies uniformly. The motion of the weights, however, and therefore the moment of inertia, does not vary uniformly, and must be expressed by points on a curve of some such form as that shown in the figure. Now, if the ratio of the tension to the moment of inertia were invariable, this latter would be determined for all temperatures by a straight line passing through the points on the curve at which it is made to correspond. The figure shows that, between these points, the tension is relatively in excess, causing a gain; whereas, beyond them on either side, the converse is the case, and there is necessarily a loss.

"The curve just discussed suggests a method of determining the manner in which the chronometer, as a whole, varies with the temperature. For assume it to be accurately adjusted at 15° and 35°, and then maintain it, for periods of twenty-four hours each, successively at a series of different temperatures; the loss or gain due to the change will indicate the distance of the corresponding point on the curve to the right or left of the straight line. Representing now each second by, say, six inches on a large diagram, the observed rates may be plotted, and the curve obtained will at once indicate the gain or loss to be anticipated at any given temperature.

"And a further extension of this principle suggests

itself. The abscissæ of points on the line of tension represent forces, and the moment of inertia is also measured in the same terms. Hence, the interval between these two lines corresponds to a force dependent on temperature, and, so long as it can be kept in a constant proportion to the tension, the rate will be invariable. Now, a variation measured in seconds really indicates a change in the proportion subsisting between the two forces, and a number of carefully-made observations, through a long range of temperature, might enable the mathematician to formulate the law governing the motion of the weights, and thus to determine their paths."

157. **Safe Range of Temperature.**—Mr. Hartnup uses the following equation for obtaining the rate of chronometers under observation at the Bidston Observatory:—

$$m = a - c\,(\mathrm{T} - t)^2,$$

where m is the rate of the chronometer at the observed temperature; T, the temperature where it has its greatest gaining rate; t, the temperature at which it is observed; a, the daily rate at the temperature T; and c, the constant representing the change in the rate consequent on the variation of the temperature from T to T ± 1°.

This method is a simplification of the former, the formula containing, as may be seen, only one variable term, involving the square of the difference of temperature. In a letter to the Secretary of the Horological Institute, in reply to one from him on the subject, asking for particulars of the mode of procedure adopted at his observatory in rating chronometers, and published in the *Horological Journal* of June, 1878, Mr. Hartnup says, after a description of the method there adopted for maintaining them in constant given temperatures:—

"The range of temperature to which we can safely expose a chronometer without the risk of sensibly changing the state of the oil appears to be so small, that we have limited this in our trials to the two extremes

of 55° and 85° (Fahr.), our object being to obtain the corrections due to imperfections in the balance apart from other sources of error. When limited to this small range of temperature, it is necessary to have recourse to scrupulous accuracy in obtaining the rates at the two extreme and middle temperatures, and the arrangements necessary for the accomplishment of this object are far more difficult to attain than those required for keeping uniform temperatures.

158. **Daily Rate of Chronometer.**— "An example copied from our records will show that an error of two or three tenths of a second in determining the rate at the two extreme and middle temperatures, acting in opposite directions, would be quite sufficient to defeat our object.

"*Example showing the Mean Daily Rate of a Chronometer on trial at this Observatory during a period of Twelve consecutive Weeks.*

No. 2720.

Week ending.	Mean Temperature Fahrenheit.		
	55°	70°	85°
1877, Oct. 20 . .	—	+ 2·47s.	—
„ „ 27 . .	—	—	+ 2·43s.
„ Nov. 3 . .	—	+ 2·17	—
„ „ 10 . .	+ 0·82s.	—	—
„ „ 17 . .	—	+ 2·47	—
„ „ 24 . .	—	—	+ 2·87
„ Dec. 1 . .	—	+ 1·97	—
„ „ 8 . .	+ 0·42	—	—
„ „ 15 . .	—	+ 2·28	—
„ „ 22 . .	—	—	+ 2·47
„ „ 29 . .	—	+ 1·82	—
1878, Jan. 5 . .	+ 0·47	—	—
Means . .	+ 0·57	+ 2·20	+ 2·59

"It will be seen from the above that the rate of this chronometer in 70° is not the same when the temperature

is raised from 55° to 70° as it is when it is lowered from 85° to 70°, the results being as follows:

"Rate in 70° when the temperature is changed—

From 55° to 70°.	From 85° to 70°.
+ 2·47s.	+ 2·17s.
+ 2·47	+ 1·97
+ 2·28	+ 1·82
Means + 2·41	+ 1·99

"We have the rate of this chronometer for the three temperatures, 55°, 70°, and 85°.

"To find the rate for any intermediate temperature—

Let T = the temperature in which the chronometer has its maximum gaining rate.
R = the rate at the temperature T.
C = the factor, or constant number, which, multiplied by the square of any given number of degrees from T, shows the amount of loss for that number of degrees."

Let us now apply the formula already given—

$$m = a - c\,(\text{T} - t)^2.$$

Substituting the three rates and the three temperatures, we have

$$\cdot 57 = \text{R} - \text{C}\,(\text{T} - 55)^2 \qquad \text{(i.)}$$
$$2\cdot 20 = \text{R} - \text{C}\,(\text{T} - 70)^2 \qquad \text{(ii.)}$$
$$2\cdot 59 = \text{R} - \text{C}\,(\text{T} - 85)^2 \qquad \text{(iii.)}$$

Now here are three equations from which can be found the three unknowns, R, C, T.

Subtracting (ii.) from (i.) and (iii.) from (ii.) we have

$$-1\cdot 63 = -2\,\text{C}\,\text{T}\,(70 - 55) - \text{C}\,(55^2 - 70^2) \qquad \text{(iv.)}$$
$$-\cdot 39 = -2\,\text{C}\,\text{T}\,(85 - 70) - \text{C}\,(70^2 - 85^2) \qquad \text{(v.)}$$

Again, subtracting (v.) from (iv.) and remarking that

$$(70 - 55) = (85 - 70),$$

we have

$$-1\cdot 24 = -\text{C}\,(55^2 - 70^2 - 70^2 + 85^2) = -450\,\text{C},$$
$$\therefore\ \text{C} = \frac{1\cdot 24}{450} = 0\cdot 002756.$$

Again, by adding (iv.) and (v.) to find T,

$$-2{\cdot}02 = -2\,\text{C}\,\text{T}\,(30) + \text{C}\,(85^2 - 55^2).$$

$$\text{T} = \frac{4200\,\text{C} + 2{\cdot}02}{60\,\text{C}} = 70 + 12{\cdot}2 = 82{\cdot}2.$$

From (i.) $\text{R} = {\cdot}57 + \text{C}\,(82{\cdot}2 - 55)^2 = {\cdot}57 + 2{\cdot}04 = 2{\cdot}61.$

The following mode of solution, applicable to any example, will now be understood.

Example:

Rate in $55° = +\ 0{\cdot}57$s. ... r,

$r - r' = -\ 1{\cdot}63$ ... d.

" " $70° = +\ 2{\cdot}20$ ... r',

$r' - r'' = -\ 0{\cdot}39$ ... d'.

" " $85° = +\ 2{\cdot}59$ ... r'',

$d - d' = -\ 1{\cdot}24$.

$d + d' = -\ 2{\cdot}02$.

$$\text{C} = -\frac{2\,(d - d')}{30^2} = \frac{-\ 2{\cdot}48}{900} = 0{\cdot}002756.$$

$$\text{T} - 70 = \frac{d + d'}{60 \times c} = \frac{-\ 2{\cdot}02}{1{\cdot}16536} = 12{\cdot}2.$$

$$\text{T} = 70 + 12{\cdot}2 = 82{\cdot}2.$$

$$\text{R} = r' - (\text{T} - 70)\,\frac{d + d'}{60} = 2{\cdot}20 + 12{\cdot}2 \times 0{\cdot}0337 = 2{\cdot}61.$$

$\text{T} = 82{\cdot}2.$ $\text{R} = 2{\cdot}61.$ $\text{C} = 0{\cdot}002756.$

Let N = any number of degrees from T, then the rate at $\text{T} \pm \text{N} = \text{R} - \text{C} \times \text{N}^2$.

Required the rate at 60°: $\text{N} = 22\ 2$ and $\text{N}^2 = 492{\cdot}84$, therefore the rate at $60° = 2{\cdot}61 - (0{\cdot}002756 \times 492{\cdot}84) = 1{\cdot}25$.

The following are the rates obtained, as above described, for each five degrees, from 55° to 85° inclusive:

Temp.	55°	60°	65°	70°	75°	80°	85°.
Rate	+ 0·57	+ 1·25	+ 1·79	+ 2·20	+ 2·47	+ 2·60	+ 2·59.

The maximum gaining rate of this chronometer is

found to be at 82°, and the difference of rate between 55° and 85° is 2·02 secs. If the maximum gaining rate had been placed at 70°, the difference between 55° and 85° would have been only 0·62 sec. The factor c = 0·002756, and this is about the average for a chronometer with the ordinary balance.

159. **Duration of Test.**—The length of time necessary to test a chronometer efficiently for thermal adjustment depends on the quality of the instrument. In the example given the chronometer is a fairly good one, and five weeks would have supplied the data for making the calculations sufficiently accurate for most practical purposes. In a twelve weeks' test we have six changes to 70°, three to 55°, and three to 85°.

In a report to the Marine Committee of the Mersey Docks and Harbour Board, Mr. Hartnup shows that a chronometer going for a period of twenty-eight weeks has a total error of 334 seconds of time, whereas if it had been corrected for temperature in the foregoing manner, its error would have been 12 seconds only.

"EXPLANATION OF TABLE IV.

"Columns 1 to 4 have been copied from the published rates of chronometers on trial at Greenwich in 1878, for purchase by the Admiralty. The weekly sums of daily rates in column 4 are those of the chronometer lowest on the list in order of merit. The rates in column 5 have been calculated in the same way as those for No. 1a, Table III. [*see* pp. 234—5]. Column 6 shows the difference between the calculated and the observed weekly sums of daily rates. The weekly range of temperature being large, it is probable that the mean of the maximum and minimum thermometers may not represent very accurately the true mean temperature, and an error of one degree in some of the low temperatures would cause a difference in the calculated weekly sums of daily rates of between two and three seconds of time.

TABLE IV.

For the First 14 Weeks.						For the Second 14 Weeks.					
For the Week ending	Temperature.		Weekly Sums of Daily Rates.		Calculation minus Observation.	For the Week ending	Temperature.		Weekly Sums of Daily Rates.		Calculation minus Observation.
	Min.	Max.	Observed.	Calculated.			Min.	Max.	Observed.	Calculated.	
Jan. 19	41	52	— 38·7	— 28·4	+ 10·3	April 27	55	61	— 1·0	— 3·2	— 2·2
„ 26	44	54	— 27·5	— 22·3	+ 5·2	May 4	56	66	+ 0·5	+ 2·0	+ 1·5
Feb. 2	42	55	— 22·7	— 23·5	— 0·8	„ 11	60	67	+ 5·9	+ 5·8	— 0·1
„ 9	40	55	— 25·8	— 25·9	— 0·1	„ 18	61	69	+ 10·6	+ 8·0	— 2·6
„ 16	41	52	— 31·0	— 28·4	+ 2·6	„ 25	83	93	+ 32·8	+ 23·2	— 9·6
„ 23	48	55	— 25·5	— 16·5	+ 9·0	June 1	87	98	+ 19·9	+ 22·3	+ 2·4
Mar. 2	84	94	+ 19·0	+ 23·1	+ 4·1	„ 8	88	98	+ 10·3	+ 22·1	+ 11·8
„ 9	86	102	+ 21·1	+ 21·7	+ 0·6	„ 15	92	99	+ 21·9	+ 21·0	— 0·9
„ 16	81	100	+ 20·9	+ 22·8	+ 1·9	„ 22	59	74	+ 4·6	+ 10·0	+ 5·4
„ 23	80	103	+ 19·5	+ 22·6	+ 3·1	„ 29	66	82	+ 15·5	+ 17·9	+ 2·4
„ 30	41	51	— 13·9	— 29·7	— 15·8	July 6	64	78	+ 15·5	+ 15·2	— 0·3
April 6	42	52	— 25·0	— 27·2	— 2·2	„ 13	65	72	+ 17·3	+ 12·5	— 4·8
„ 13	47	57	— 10·2	— 15·3	— 5·1	„ 20	66	80	+ 11·0	+ 17·1	+ 6·1
„ 20	54	61	— 7·9	— 4·2	+ 3·7	„ 27	67	78	+ 21·1	+ 16·6	— 4·5
			— 147·7	— 131·2	+ 16·5				+ 185·9	+ 190·5	+ 4·6

"Difference between the first and second 14 weeks.
Uncorrected for change of temperature = 334 seconds of time.
Corrected for change of temperature = 12 seconds of time.

"At the time of the trial the maximum gaining rate of this chronometer was +3·32 secs. in a temperature of 87°, and the factor c was —0·0045. The temperature used in the calculations is the mean of the maximum and minimum thermometers shown in columns 2 and 3. The weekly range of temperature is large, and a small error in the mean would cause a large difference in the calculated rate. For the week ending March 30th, two degrees of Fahrenheit would make a difference of five seconds in the calculated weekly sum of daily rates, the mean temperature for that week being upwards of 40° from the temperature in which the chronometer had its maximum gaining rate."

160. **Airy's Experiments.**—Sir G. B. Airy, in experiments which he made in the year 1859 with one of Charles Frodsham's chronometers, with a plain brass balance fitted experimentally for the purpose, found the loss consequent on each increment of heat to be 6·11 secs. for one degree (Fahr.) in twenty-four hours. Referring to this result, Mr. Frodsham, in his report to H.M. Commissioners of the International Exhibition, 1862, says:—

"The strength of springs being inversely as their length, and the effect on time as the square roots of their lengths, the loss amounts to about 17 seconds per diem for 60° of increased temperature. The decrease of rate by the expansion of the balance is also easily found by figures, it being inversely as the diameter, and in a plain brass balance amounts to about 63 seconds per diem for a change of temperature of 60° of Fahr. But 17 + 63 = 80 only, whilst the fact is established of a uniform rate of 6·11 seconds for each degree of Fahr.; and since 6·11 × 60 = 367 seconds, it leaves 247 seconds of daily rate still to be accounted for, and this has been satisfactorily proved to arise from the spring's loss of elastic force by an increase of temperature." And again,

after remarking upon the smallness of the error of 4 seconds in a range of 60°, which the ordinary compensation balance fails (from its inherent defect) to remedy, and observing that if the motion were required to be greater than it is we should have a greatly increased error in the extremes, whilst the reverse effect would arise if the main error were less, Mr. Frodsham goes on to say: "The total decrease of the diameter of the compensation balance to restore the chronometer to time for a daily loss of 367 seconds for 60° of temperature by a direct motion is but $\frac{1}{1000}$ of its diameter, or about $\frac{2}{1000}$ at the compensation masses or weights. But it requires 80° of laminæ to effect this object, because this motion is not direct, but by leverage, and moves diagonally, and consequently with loss of motion in the ratio of the hypothenuse to the perpendicular; whilst, therefore, the direct decrease of the diameter of the balance of $\frac{1}{1000}$ affects a compensation 6 min. 7 secs., the compensation weights or masses being moved nine times that quantity on the circular compensation rim would only correct the compensation to the amount of one second daily, supposing the weights to stand at 90° on the compensation laminæ. Thus the travelling forward in heat and backward in cold, instead of towards the centre, is one of the chief causes of the error in the extremes. The forward or diagonal motion I have proved to amount to nearly the entire motion towards the centre of the balance. . . . These are the true causes of the error, and show that to obtain perfect and uniform compensation, the masses should move telescopically in the same ratio and uniform manner that the plain balance is known to expand, and the balance spring to lengthen and lose its elastic force."

161. **Hartnup's Suggestions for Checking the Error.**—Mr. Hartnup, in his report, says that after supplying the necessary data for making the calculations for variations of the ordinary balance, where full advantage was taken of the information given, he found it necessary,

in order to show the practical utility of his method, to furnish the mariner with the calculated rates for the various temperatures to which his ship was likely to be exposed, and to supply him with the means of keeping a systematic record of the performance of his chronometers at sea. Following up this idea, he prepared a skeleton form for recording the observations at sea. The manager of the Pacific Steam Navigation Company had this form printed, and the ships of the Company were supplied with books containing these forms. For still further reducing the error, Mr. Hartnup recommends that every vessel should carry three chronometers, the differences of Greenwich mean time between the first and second and the second and third being found daily, both by calculation and comparison; any change in the rate of one chronometer will thus be shown by its agreement or disagreement with the other two. He says:—"The whole of this process is only the work of a few minutes, and a record of the calculated Greenwich mean time, and the performance of the instruments relatively to each other, is preserved for future reference."

The following table shows that the loss that occurs beyond the maximum gaining rate of the chronometer increases as the square of the increase of temperature from that point multiplied by the factor c, which is obtained as before explained.

For	10°	=	0·3	seconds.
,,	12·5°	=	0·37	,,
,,	15°	=	0·675	,,
,,	17·5°	=	0·92	,,
,,	20°	=	1·2	,,
,,	30°	=	2·7	,,
,,	40°	=	4·8	,,
,,	50°	=	7·8	,,
,,	60°	=	10·8	,,

If the errors of chronometers were approximately tabulated as suggested, this would be the proper way to

adjust them, and not by getting them to time at two extremes; but if a rate is given with a chronometer which it is supposed to keep, this plan of adjustment will not do.

As Mr. Hartnup's calculations are based solely upon the ratio of the expansion and contraction of the balance to the elasticity of the spring, the other sources of error are not taken into account, and these somewhat modify in practice his conclusions, the error of nearly eleven seconds in a range of temperature of 60° being more than most chronometer makers have found in the ordinary balance.

162. **Adjustment of Chronometers.**—Mr. Charles Frodsham says:—"With balances of the best proportions chronometers may be adjusted to within 4 seconds of daily error for a change of temperature of 60° Fahr., but if we adjust for extremes we gain in the middle temperatures, thus:—

Thermometer	90°	daily rate		0·0 seconds
"	60°	"	"	+2·5 gaining
"	30°	"	"	0·0

"If we adjust for heat and middle, we have the following:—

Thermometer	90°	daily rate		0·0
"	60°	"	"	0·0
"	30°	"	"	—4·0 losing

"And if we adjust for the middle and low, we have the following:—

Thermometer	30°	"	"	0·0
"	60°	"	"	0·0
"	90°	"	"	4·0 losing

and most chronometer springers consider that the average error of the ordinary balance is from 4 to 5 seconds a day in a range of temperature of 60° Fahr."

163. **The Error of the Compensation Balance.**—Sir E. Beckett says, speaking of the error of the compensation balance:—"I believe it has never been dis-

puted that old Mr. Dent was the first person to explain the cause of this error in the 'Nautical Magazine' in 1833."

It is not probable that the men who first discovered the error of the Earnshaw balance knew as much about the cause of it as we do now, but long before Mr. Dent's explanation of it they knew that if a chronometer was adjusted at any two given temperatures, and was going to mean time at those temperatures, it would gain on this rate at any temperature between the two, and lose on its rate if the temperature went beyond them. And they knew that this arose from the fact that the compensation weights of the balance were not carried to the centre fast enough in heat, and receded from it too fast in cold.

CHAPTER XVIII.

PERMANENT COMPENSATION BALANCE.

164. **Hardy's Balance.**—In 1804, William Hardy, watchmaker, invented a balance (shown in Fig. 47) wholly different in form to the circular balance in common use. He called it a permanent compensation balance, and in his description of it he says:—"It will carry the weights to the centre quicker in heat than they are made to recede in cold." Hardy evidently knew what was wanted, although he did not succeed in obtaining it, as his balance never could have answered the description he gave of its action. However, he received the patronage of the Society of Arts, who gave him thirty guineas for his invention, and he afterwards obtained the gold medal of the Society and a prize of fifty guineas for the invention of an escapement which has been very little heard of since.

Hardy's balance (Fig. 47) consists of a diametrical

bar, having two small pillars rising vertically at its ends, upon which are screwed the compensation weights, *a a*. The bar is not a lamina, but consists of two distinct pieces of metal, the pillars or standards being riveted to the lowermost, which is of brass, at *s* and *s*; the top piece, which is steel, is filed thinner at the ends, the riveting of the standards holding it tightly against a shoulder which is left upon each for that purpose at the

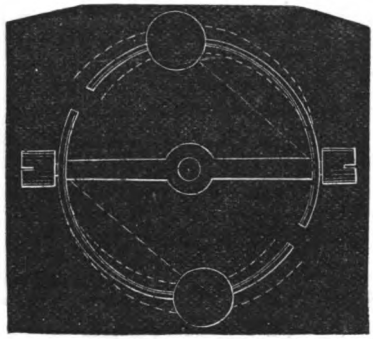

Fig. 46.—Ordinary Compensation Balance with sliding weights.

ends. A boss is left upon and between these pieces at the centre, through which they are screwed to the collet on the staff, in the same way as an ordinary chronometer balance, and these are the only places where the pieces are in contact. The steel bar is filed very thin at the ends, in order to offer less resistance to the brass when expanding, on the same principle as having the steel thin in the laminæ of an ordinary balance. The compensation acts thus in heat: the steel bar not expanding so much as the brass one, *e e*, the standards which carry the weights form a sort of lever, of which the ends of either bar may be considered the fulcrums, and the weights are drawn or driven to and from the centre or axis of the balance in heat and cold. But the

standards upon which they are fixed having no action in themselves, the weights cannot approach or recede from the centre in heat and cold in any other ratio than do those of an ordinary circular balance, to which this balance is obviously inferior for various reasons. The screws, *c c*, are used as timing screws.

This balance differed in form from any that had been made before it, and suggested some others that were

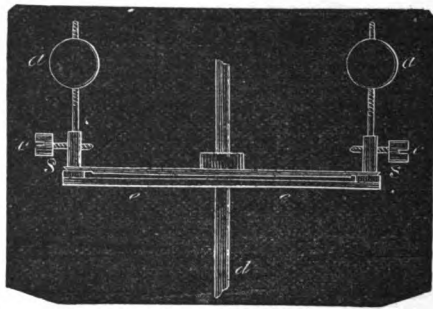

Fig. 47.—Hardy's Balance.

afterwards made on the same principle, which have given the best results.

165. **Eiffe's or Molineux's Balance.**—In 1840 Robert Molineux patented an auxiliary compensation balance, but it happened that at the time he obtained his patent, E. J. Eiffe had a chronometer on trial at Greenwich with auxiliary pieces exactly similar to those for which he obtained his patent. For this, on the recommendation of the Astronomer Royal, Sir G. B. Airy, Mr. Eiffe received from the Lords of the Admiralty a reward of £300. As, however, the patent was secured by Molineux, this balance was generally called after him in the trade.

In speaking of compensation balances some years ago, I incidentally mentioned this balance, describing it as Molineux's, and it was at that time, as before mentioned,

that Mr. Eiffe, then an old man, wrote to me reminding me of the above grant, and of the decision of the Astronomer Royal in his favour.

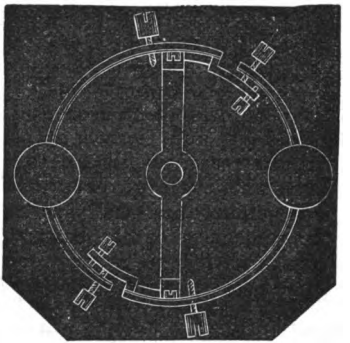

Fig. 48.—Eiffe's or Molineux's Balance.

This was the first auxiliary which secured practically the object in view, namely, the diminution of the inertia in heat, and *vice versâ*, in the ratio of the spring's alteration of elasticity. It was very successful in the hands of its first inventors, being high up on the list at the Greenwich trials on several occasions.

Its action is shown in Figs. 48 and 48 A. Mr. Molineux thus describes it:—"Having in the usual manner compensated the balance, so that its vibration shall be equal at the temperatures of 30° and 55° Fahrenheit, it will be found that if the temperature be raised to a greater heat such balance will vibrate, so that the chronometer will lose its time or decrease its rate; but by this invention I am enabled to compensate for the loss in the following manner:—

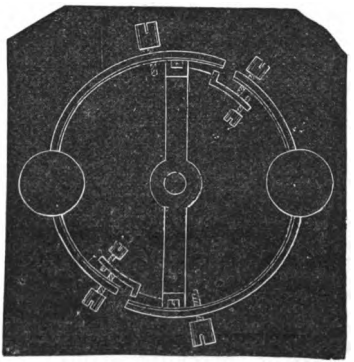

Fig. 48A.—Eiffe's or Molineux's Balance.

"In Fig. 48 the balance, with its supplementary pieces,

is shown in the position it assumes at the temperature of 55°, its rim being then considered circular, and the middle projecting portions of the supplementary pieces banked in contact with the rim. Now, if the temperature be raised, the balance rim, with the supplementary compensating pieces, will come into the position shown in Fig. 48A, in which, from the increase of heat, the balance has ceased to be circular, its free ends, to which the adjusting screws are attached, having approached nearer the centre of the balance, and with them carried the free ends of the supplementary compensating pieces, so that their middle projecting portions no longer bank on or are in contact with the inner side of the balance rim, and thus, by a proper adjustment of the length, position, and weight of the supplementary compensating pieces, I am enabled to compensate for temperatures above that at which the balance has been adjusted, while the adjustment for temperatures of 30° and 50°, to which the balance had been before adjusted, remains unimpaired."

Molineux made chronometers with this auxiliary, and one with a balance of this construction was tried at Greenwich Observatory in 1840 for thirty weeks, in temperatures ranging from 18° to 110° Fahrenheit, its error during that time being 11·4 seconds between the least and greatest, and 4·3 seconds between one week and the next. This was very good performance in such a long range of temperature, and with a construction of the balance that is now thought but very little of; and it shows what may be done by careful manipulation, even where the principle is not to be commended. Molineux's chronometers were very well and carefully made. I have seen them with a small ruby set in the auxiliary piece for the screw in the free end of the lamina to act against.*

* It may be of interest to notice that the fourth chronometer on the list at the annual Greenwich trial in 1884 was furnished with this auxiliary.

These auxiliary pieces act only in heat. They are made of two pieces of steel, which are screwed to the rim or to the arm of the balance, the outer half being left thick, and having holes drilled along it to allow of the screw which forms the auxiliary weight being shifted for adjustment, and a heel left projecting, which rests against the short end of the balance rim, and from that part backwards the pieces are filed to thin springs. Assuming that the chronometer is adjusted and right at 30° and 60° (without the auxiliary), if the temperature is raised to 90° the rim of the balance will go nearer the centre, and the small screw in it will push the auxiliary piece, weight and all, before it, and, by diminishing the radius of gyration, cause the chronometer to gain the four seconds it is calculated to lose with an ordinary balance so adjusted.

166. **Dent's Balance.**—Although many modifications of this principle have been made, some of them with good results, it has the disadvantage of acting only at high temperatures, added to which, the mechanical action of parts in contact is unreliable, the thin springs upon which the auxiliaries are carried being another weak point. These considerations, and the necessity for great care and skill in the operator to make this auxiliary of any use, render it unfit for ordinary work-a-day instruments. Dent took up Hardy's idea of a balance, and made a great many varieties of it, of which the one shown in Fig. 49 gave the best results. His object was to make a balance that would do what Hardy professed his

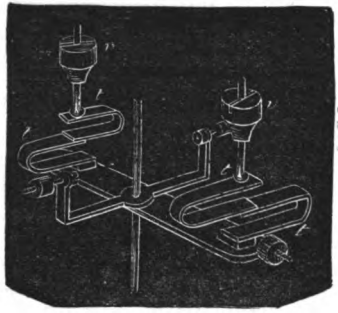

Fig. 49.—Dent's Balance.

capable of doing, namely, carry the compensation weights to and from the centre quicker in heat and slower in cold, and also make its action continuous.

The principal compensation in this balance is in the diametrical bar, which is the usual compound one of brass and steel, the brass being underneath the steel. But instead of the compensation weights being set on pillars rising from it, as in Hardy's balance, they are fixed to

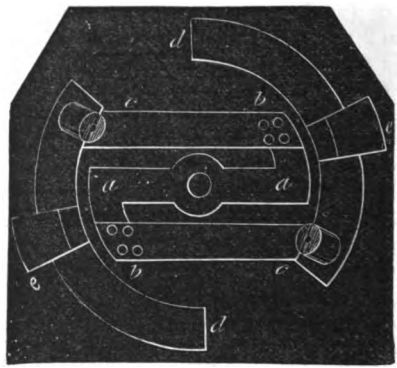

Fig. 50.—Hartnup's Balance.

bent pieces of laminæ, *t t*, having the brass inside; these laminæ, upon the bending upwards of the bar in heat, move the weights more directly towards the centre. The compensation may be adjusted by shifting the weights, *v v*, along the laminæ, giving them more or less action, or by turning the laminæ round a little on the bar for the same object. The final adjustment for temperatures is made by screwing the weights to or from the laminæ on their pillars.

167. **Hartnup's Balance.**—Another modification of Hardy's principle is shown in the balance invented by Mr. Hartnup. Mr. Hartnup was not seized with a desire of becoming famous in his generation as an in-

ventor in this way without knowing in what direction improvement was required, as is too often the case with inventors. But knowing wherein lay the weaknesses of all the compensation balances that had been hitherto invented and made, he set about in a rational manner to avoid them, and suggested a new form of balance to Mr. Wm. Shepherd, a watchmaker of Liverpool, which he thought would give more satisfactory results. He laid down the rule that the balance must be circular, so that it could be made with facility in the lathe, and be more likely to keep its poise in the varying temperatures. After repeated trials, Mr. Shepherd produced the balance shown in Fig. 50. The centre bar, *a a*, is a lamina of brass and steel, the brass being on the top; the parallel bars, *b b*, are also compound bars, with the steel in them uppermost, and these bars are solid with the rim, being fixed to the centre bar with four small screws on each side. The rim, *d d*, has the brass outside, as in the ordinary balance, but instead of being at a right angle to the bar, it is at an angle of 45°, being what is termed "dished."

The balance acts thus in heat: the centre arm bends downwards, while the two arms, *b* and *b*, having the laminæ reversed, bend upwards, and the action of the two together is to throw the rim of the balance inwards all round, and thus diminish its circumference (and not in part only, as in the Earnshaw balance), and, from the form of the rim, the circumference diminishes more rapidly the more heat is given to it. The rim acts in the same way as the rim of the ordinary balance, but, from its form, in a less degree, and consequently, there is less of the error of the ordinary balance.

In cold, the laminæ acting the reverse way tend to flatten the rim, and there is, therefore, less motion of the weights from the centre in cold than there is towards it in heat. The compensation weights, *e e*, are at the same angle as the rim, and the mean time screws, *c c*, are placed within the circle of the balance rim. It will

at once be seen, therefore, that the action of this balance comes nearer to that of the plain uncut balance in its expansion and contraction than any balance yet noticed. The adjustment for compensation is effected in the usual way, and although the movement of the weights along the rim is less effective than in the ordinary balance, it affords a sufficient adjustment. Several chronometers with these balances were made by Mr. Shepherd, which fulfilled the expectations of himself and Mr. Hartnup; the latter gave the rates of three chronometers with these balances for a considerable period in temperatures ranging from 31° to 105°, which showed very little variation that could be attributed to imperfect compensation. But although the balance was given freely to the trade, and a good many of them were made and applied at first, they did not seem to answer as well with others as they had done with Mr. Shepherd, the original maker. The balance was, for one thing, difficult to make, and consequently expensive—that is, in comparison with the ordinary balance,—but the greatest drawback was the necessity of making it in two pieces, which added to the difficulty and uncertainty of turning it out perfect, so that at present it may be said to be abandoned, but there is a principle in the bevelled rim which, I think, may yet be further developed.

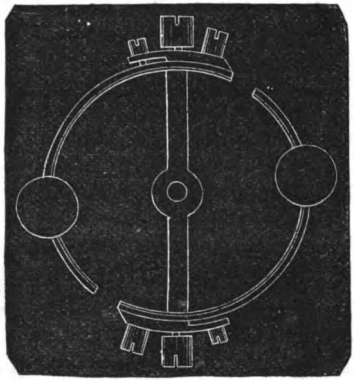

Fig. 51.—Poole's Auxiliary.

168. **Poole's Balance.**—The balance known as Poole's

auxiliary is, in fact, not an auxiliary at all, but is a hindrance rather than a help to the action of the balance. It was devised by the late Mr. John Poole, and consists of the application of a stop to the ordinary balance; it is in its nature so simple that it needs very little describing (Fig. 51). The principle of stopping or interfering with the main compensation of the balance looks very unpromising at first sight, but it has had more success in practice than any other form of secondary compensation. The short segments of a circle of brass are screwed firmly on to the outside of the rim of the balance, opposite the arm; the ends of the pieces that project towards the free end of the laminæ are filed away from the inside, so that they are free of the rim, and one or two small screws are tapped into these pieces so as to be brought to bear against the rim of the balance at any given temperature; they are the ordinary timing screws. Unlike most secondary compensations, this one acts only in cold; the mode of adjustment is simple, and is just the reverse of Molineux's.

If, in accordance with Mr. Frodsham's table, the chronometer is adjusted at 90° and 60°, and is going to time at these two points, it will lose 4 seconds or more at 30°. If, then, the small screws in the check piece are screwed in until they just touch the rim of the balance at a temperature of 50° or 60°, as the rim goes out with a lowering of the temperature these screws offer sufficient resistance to it, if in the right places, to prevent the loss of 4 or more seconds, which the balance would otherwise do. Mr. Poole made a great many chronometers for the trade, and with this balance a great many chronometer makers to the Admiralty. The Poole check has been successful in the hands of other chronometer makers, and from its simplicity and lowness of price has been more generally used than any other form of secondary compensation.

169. **Loseby's Balance.**—Mr. E. F. Loseby obtained a patent for an improvement of a balance invented by

Le Roy, but Loseby's modification was so good in principle, and so exceedingly well executed, that it is the admiration of all chronometer makers.

Le Roy's balance had small thermometers attached, the spirit which they contained expanding radially to the centre in heat. Loseby, however, substituted two curved tubes containing mercury sealed, with a little air in them, with the bulbs outwards (Fig. 52). These bulbs were held in a cup-joint at the extremity of the ordinary laminated arm of the balance, and by bending this joint inwards or outwards, the direction of the mercury in its expansion and contraction could be altered and the adjustment completed. *c c'* are the laminated arms, *w w'* the compensation weights, *t t'* the timing screws or nuts, *i i'* the joints which hold the bulbs, and *m m'* the small mercurial thermometers.

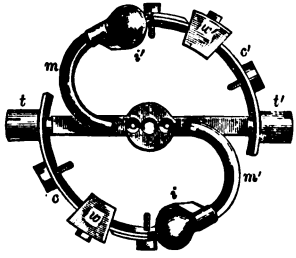

Fig. 52.—Loseby's Balance.

The arms *c c'*, by bending in in heat, alter the direction of the mercury in the tubes, which thus goes in more directly to the centre, and when going outwards in cold, have the contrary effect.

Theoretically, this seems the best balance yet applied to a chronometer, and during the seven years Mr. Loseby sent chronometers with this balance to Greenwich, he held a very high place in the trials, notwithstanding that, as he was not a manufacturer on a large scale, he had few chronometers to choose from. He applied to Government several times for a reward for his invention, but his applications being unfavourably reported upon by the Astronomer Royal, he never received one, and being ultimately disappointed and dissatisfied with what he considered unjust treatment,

he, in 1853, retired from the Greenwich competitions altogether.

170. **Kullberg's Balance.**—Kullberg's flat rim balance is another modification of the Hardy-Hartnup principle, as may be seen from the accompanying figure (Fig. 53). The arm and rim of this balance are in the same plane; the bar is a compound one of brass and steel, the brass being uppermost; the rim has the lamina reversed.

The rim of this balance has much less action towards the centre than it would have if it were perpendicular, but it has a little, and the compensation is effected by the bar bending downwards in heat; and as the rim is offering resistance and bending upwards, the effect of the two actions is to tilt the weights, *c c'*, which are placed at the extreme free end of the rim, upwards and inwards; the two screws, *t t'*, at right angles to the compensation weights, *c c'*, are the mean time screws or nuts. The balance is cut close to the bar; the rim at its extremities has short circular segments standing up from it, which carry the compensation weights; these short pieces give little room for the adjustment in heat and cold, but the compensation is also affected by the distance the weights are fixed from the plane of the balance, the two small screws seen in each weight being placed there to determine this height from the rim. Mr. Kullberg has been very successful with this balance in the Greenwich trials, but it needs to be very well made, and there is considerable difficulty in fusing brass on to two sides of a piece of flat steel, as in this balance, soundly and without flaws. The bar and rim must not be thick, otherwise the compensation will not be active enough; and as the compensation weights require to be at the extreme ends

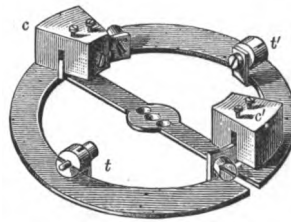

Fig. 53.—Kullberg's Flat-rim Balance.

of the rim, and the leverage from the balance staff to them is so great, the least external motion will give the weights a lateral vibration, and any damage they may receive from careless handling will alter the compensation. Thus, however perfect their performance may be when they are carefully handled, they are obviously less fit for the rather rough treatment to which chronometers at sea are often subjected than a more rigid balance would be.

Mr. Kullberg informs me that it is not with this balance he has achieved his latest successes, but with another, the particulars of which he has not published.

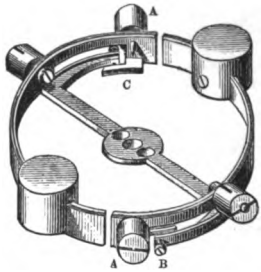

Fig. 54.—Kullberg's Improved Balance.

171. **Kullberg's Improved Balance.**—Another balance by Mr. Kullberg is shown in Fig. 54; he describes it as an improved ordinary balance, the auxiliary piece being made from a part of the rim of the ordinary balance. Its action is somewhat similar to that of Poole's balance, as it acts in cold only, and has a check-piece; but unlike Poole's check, which acts on the entire balance rim, this one checks only the secondary compensation pieces, leaving the main adjustment free. I have seen no record of the performance of chronometers with this balance, but it seems to have all the elements of a good one, namely, simplicity and strength.

The main compensation weights and the mean time nuts act in no wise differently from those of an ordinary balance. The rim is cut nearer the middle than usual, giving about two-thirds for the main compensation, and one-third for the auxiliary; the short section of the rim is divided into two by a slit cut in the middle, from the mean time nut to the screw A, which acts as the auxiliary weight. When the balance is being crossed

out, a portion of the steel from which the arms are formed is left projecting to strengthen the bottom half of this short piece of the rim, at the extreme end of which a knee is left at C, and a small screw is tapped into the bottom piece, which is cut through between the screws A and B; the top piece with the knee attached, and the screw A, form the auxiliary, the action of which is easily seen from the diagram. As the bottom piece is rigid, the top piece, or auxiliary, is prevented from going out in cold by the knee C coming in contact with the point of the screw B. If, therefore, the chronometer be adjusted by the main compensation weights at 50° and 90° (which may be done before the short section of the rim is divided into two), when the auxiliary is separated from the bottom piece, if the screw B be brought close to the knee C at a temperature of 50°, it will prevent the auxiliary from going out farther if the temperature is lowered.

The lower part of this short piece might have some action, according to the thickness of the steel attached to it, and need not therefore be a rigid stop, as if it had any action, it would be in the same direction as the other portions of the laminæ, and the means of correctly adjusting the secondary compensation will depend on the resistance offered by the stop and the weight of the screw in the auxiliary piece.

As the auxiliary piece is too narrow to have more than one hole drilled for the screw without weakening it, a weight, made to slide on it like the main compensation weight, would facilitate the means of adjusting the secondary compensation.

172. **Mercer's Balance.**—Mr. Mercer modified the Molineux-Eiffe balance, and obtained very good results from it through a long range of temperature. As shown in Fig. 55, instead of the auxiliary weight being attached to a thin spring, to be pushed inwards by the free end of the rim of the balance, or, as in some of Molineux's balances, to a short piece of lamina screwed to the rim of the balance, he had a piece of lamina made, three-quarters

of an inch long, about the substance of the rim of a 12-size watch balance, fastened to which is a small sole-piece, which is screwed to the arm of the balance. These laminæ act in heat, and are stopped in cold by the screws *h h'*, which can be adjusted so as to stop them at any required temperature. The screws *m m'* are the secondary compensation weights, and this compensation can be made more or less effective by shifting them to or from the ends of the laminæ, in which are a series of small holes to receive them. This auxiliary acting only in heat, and not being constant, the mode of adjusting it is the same as that of most others of a similar principle. If the main compensation from the coldest point determined on to 50° or 60° is effected with the auxiliary pieces taken off, or by screwing the small screws *h h'* in until they prevent them from acting, the secondary compensation is adjusted by setting the screws *h h'* in such a position that the auxiliary laminæ cannot go out in temperatures beyond the highest to which the main compensation has been made, but they are free to go in beyond that temperature.

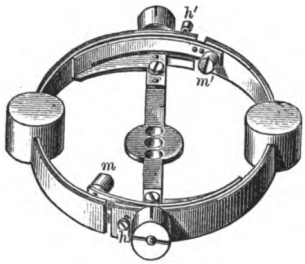

Fig. 55.—Mercer's Balance.

Mr. Mercer has been very successful at the Greenwich trials with this balance, and it may be credited with making several of the numerous chronometer makers to the Admiralty.

173. **Airy's Compensation Bar.**—For a long time Sir George Airy advocated some means of acting on the balance spring in order to enable a final adjustment for compensation to be made without the necessity of removing the balance from the chronometer, and, some years ago, he invented what he called a compensation bar, which at first he required to be put to all chronometers sent to

the observatory for trial, but which condition he afterwards modified. This arrangement consists of a steel radial bar fixed friction-tight on the balance staff underneath the spring collet. The extremities of the bar have short springs fixed to them, and carry two small weights; they are set on so as to keep these weights slightly pressed against the inside of the rim of the balance. By moving the bar round on the staff, these weights are brought nearer to or farther from the free end of the rim, and affect the compensation somewhat after the manner of Molineux's invention.

The trade disapproved of this, however, and it has never been employed except in chronometers sent to the Greenwich trials.

174. **Chronometer Balances.**—Chronometer balances may be divided into two classes, the vertical and horizontal. The former, including all the balances made after Hardy's idea, are certainly the more perfect theoretically, as they admit of constructions that comply with the condition of the weights going to the centre in the necessary ratio, but they are all more or less weak; and if the rim is bent out of its original shape, either by an excess of heat or cold, or by accident, the compensation will be altered; they are also more difficult to make, and have never come into general use in any form. The horizontal balance has a known, and so far an incurable, defect in principle, and all auxiliaries applied to it are discontinuous, acting either in heat or cold only; but in other respects it is so well adapted to a portable timekeeper that it is likely to hold its ground, with all its defects.

175. **Chronometer Trials.** — The annual trials of chronometers at the Royal Observatory for purchase by the Admiralty give an undoubted stimulus to chronometer makers to improve the science of horology, although with the yearly increasing number of steam-ships, and consequently shorter voyages, chronometers are of less importance to navigators than when voyages extended over longer periods. It would, however, be a great improvement

on the present system if no chronometer were to be received for trial except from and in the name of the *bonâ fide* maker of the instrument, and if the Lords of the Admiralty were to offer, as they formerly did, rewards of three, two, and one hundred pounds for the first three chronometers on the list, instead of taking it for granted that no further improvement is possible, and paying such a price for the best as makes it worth the while only of those who desire to have the title of chronometer maker to the Admiralty to compete.

CHAPTER XIX.

KEYLESS WORK.

176. **Caron's Keyless Watch.**—The first keyless work of which we have any account was made by Peter Caron, a celebrated Paris watchmaker (afterwards styled Beaumarchais), for Madame de Pompadour about the year 1752. It is thus described by him :—"A watch in a ring . . . It is only four lignes in diameter, and two-thirds of a ligne in height between the plates. To render this ring more commodious, I have contrived, instead of a key, a circle round the dial, carrying a little projecting hook. By drawing this hook with the nail two-thirds round the dial the ring is rewound, and it goes for thirty hours."

177. **Other Contrivances.**—Many contrivances have been imagined since this invention for dispensing with the key in winding the watch, such as by drawing out the push piece in the pendant, and pushing it back again, and opening and shutting the cover of the case, &c.; but they were all more or less complicated, took up a great deal of room in an instrument, where there is never much to spare, and were consequently out of favour, especially

with watchmakers, and never generally made. They were, in fact, merely mechanical toys, constructed from time to time for amateurs, or for persons of distinction, more as a proof of the maker's mechanical ingenuity than for

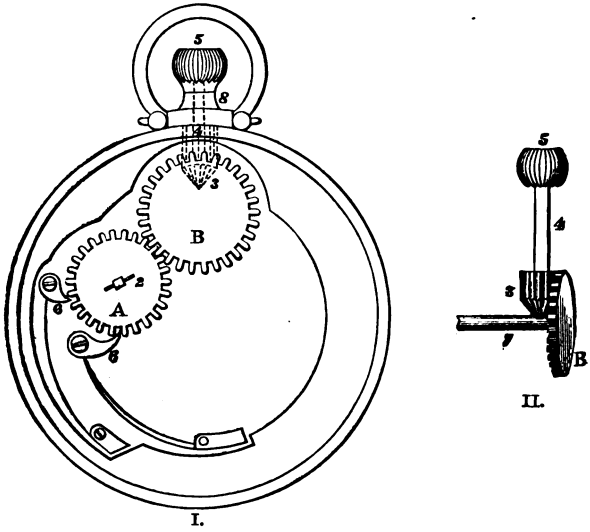

Fig. 56.—Prest's Keyless Work.

anything else. The Emperor Napoleon possessed one of these watches, which is said to have been wound by the motion given to a pendulous weight in walking, as in a pedometer.

178. **Prest's Keyless Work.**—In 1820 Thomas Prest, of Chigwell, in Essex, took out a patent for "a new and additional movement applied to a watch to enable it to be wound up by the pendant knob, without any detached key or winder." Fig. 56 represents Prest's winding arrangement, of which the following (taken from his specification) is a description :—

Fig. 56, I., represents the back of the pillar plate when the dial is taken off. Fig. 56, II., represents the action of the pendant pinion 3 into the under part of the wheel B, which is not so distinctly seen in Fig. 56, I.

In Fig. 56, I., A is a brass wheel, fixed on the square of the barrel arbor, and secured by the pin, 2; B is the wheel of communication between the pendant pinion 3 and wheel A. This wheel B has the same number of teeth as wheel A, but the underside next to the pillar plate is hollowed, so that the teeth have a double action sideways, or laterally, into the wheel A, and downwards, or vertically, into the pinion 3 (for this vertical action see Fig. 56, II., where the teeth of wheel B act above the pinion 3). 3, is the pendant pinion, whose arbor 4 passes through the pendant shank 8; the end of the arbor is squared to receive the knob 5 fitted thereon, and secured by a nut. In Fig. 56, II., 7 is the arbor of the wheel B; 5, pendant knob, which being turned gives motion to the wheel B, which turns wheel A, which turns the barrel arbor, and thereby winds up the mainspring. 6 and 6 are two clicks which secure the wheel A, and consequently the barrel arbor in its place, till the mainspring developing itself requires to be wound up again, by turning the pendant knob as before.

Prest's invention was to some extent adopted by the trade at the time, a good many of these watches being made for or by J. R. Arnold, and it is the undoubted parent of the present keyless watch; but great improvements having been made in the lever escapement by Savage and others, and a demand having arisen for more accurate timekeepers, keyless watches were abandoned, as Prest's mechanism could be applied only to going barrel watches, and for many years (embracing the time of the greatest prosperity of the watch trade in England) no keyless watches were made here.

179. **Swiss Keyless Work.**—The Swiss, however, see ing the applicability of the keyless mechanism to going barrel watches, had, about the year 1851, contrived many

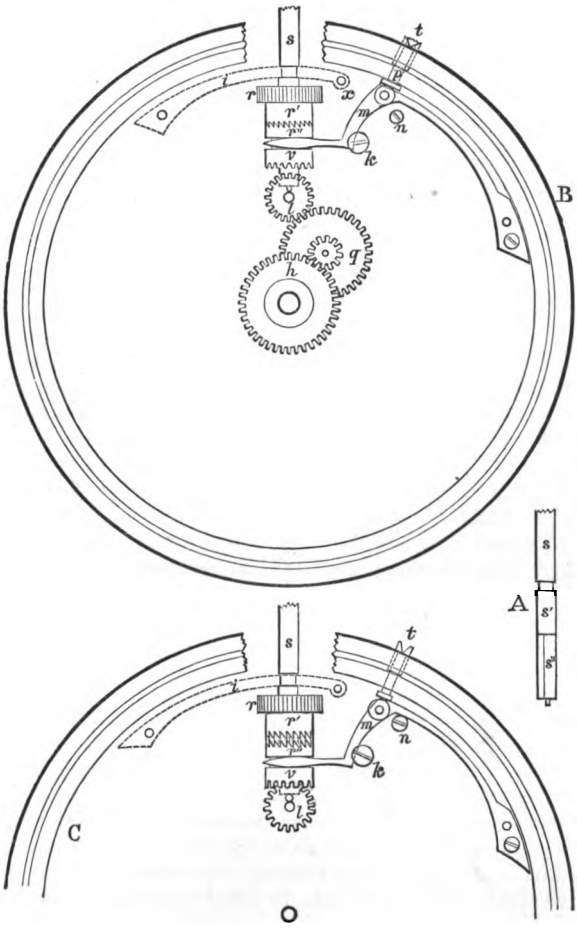

Fig. 57.—Swiss Keyless Work.

methods of winding the watch and setting the hands from the button, for which Prest's winding arrangement had no provision. Fig. 57 shows the arrangement generally adopted by the Swiss in their best watches, but many other forms of keyless mechanism are applied by them to cheap watches. In the diagram the winding wheel and the wheel on the barrel arbor square are removed from the plate; the winding wheel has two sets of teeth, one set gear with a small intermediate wheel which gears with the barrel arbor wheel, and the other which are contrate, with the winding pinion. The winding pinion $r\ r'$ occupies a part of the round part of the winding stem A at s', upon which it can turn, but is prevented from moving up or down it by the shape of the plate, which has a part cut out of it to admit the pinion; the lower part of it, r', has contrate ratchet teeth cut upon it. The pinion $r''\ v$ is fitted on the square of the stem A, and its ratchet teeth are pressed upwards into those of the winding pinion by the spring m, as shown in B. By turning the button to the left (in the figure) the pinion $r\ r''$ is rotated and the watch is wound, and by turning it the reverse way a ratchet action is produced between the ratchet teeth of the two pinions which click over one another. In setting the hands, the thumb nail is pressed upon the push piece p which pushes in the spring m, and the pinion $r''\ v$ down the square of the stem gearing its contrate teeth v with the intermediate wheel l (which is in gear with the minute wheel q), as shown in C; when the stem is turned, the hands are thus set, the pinion $r\ r''$ being out of action. The screw k prevents the long spring from rising from the plate, and the screw or stud n prevents it from pressing the pinion $r''\ v$ too deeply into the wheel l; i is a spring brace screwed on the other side of the plate lying across the slot in the stem s; by withdrawing the screw at the end x of this brace a little the winding stem can be drawn out from the watch. The stem is fitted easy in the pendant and has a pivot at the other end which goes into a hole in the plate or in a stud underneath the wheel l; the

push piece is fitted to a pipe soldered into the case and having a part of it projecting in order to protect the push piece and prevent it from being accidentally pressed in in wear, etc.; it has a V notch filed across it to allow of the nail going down. The objections to this form of keyless work are that it is not strong, is troublesome to make, and the contrate depths are rough, especially that of the winding wheel and pinion, which wear quickly as the pinion is always pressing the wheel away from it. These faults in the Swiss keyless work being apparent to English watchmakers, not many of this description have been made here, but what is known as the "rocking bar" mechanism has been invented and adopted as the English model. At first making the keyless work was a branch of watchmaking proper, and, the movements and calibers being different, great diversity of form and planting was the result. To Mr. Hewitt, of Prescot, the credit is due of having put a stop to this, as he made and planted the steel wheels on the movements. Other movement makers followed his example, and now almost all the keyless work is done in Lancashire by the movement makers, thus ensuring the best model, greater uniformity, and a great reduction in the price of the work.

180. **Rocking Bar Keyless Work.**—Fig. 58 shows the rocking-bar keyless work. *o* is the bevelled conical winding pinion; *b* is a boss which is screwed to the plate, fitting through the countersunk winding wheel *w*, and a steel bar or platform *c*, upon which are screwed two wheels, *i*, *h*, which rotate upon two pipes projecting from the bar, the heads of the screws being countersunk; the rocking bar *c* rests on the plate and the winding wheel *w* rotates on the bar; the spring *s* on the other side of the plate keeps the winding in action by pressing a stud screwed into the bar and projecting through a space cut out of the plate. On turning the button to the left the winding wheel *w* is turned and the watch wound; on reversing the button the barrel-wheel is prevented from being affected by the click *m*, and a ratchet action

takes place between the teeth of the wheels *i* and *g*.

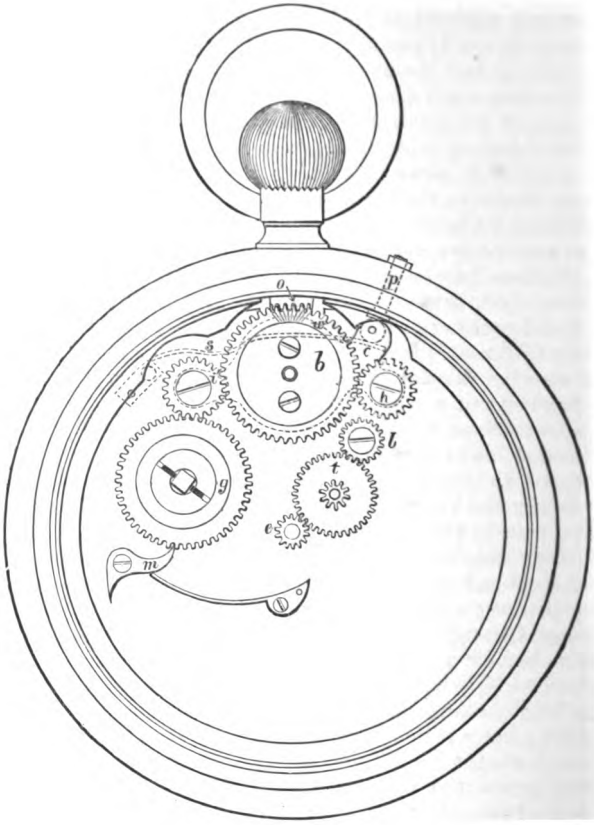

Fig. 58.—Rocking Bar Keyless Work.

The hands are set by pressing in the push piece *p* with the nail, which throws the wheel *i* out of action

with the wheel *g*, and the wheel *h* into action with the intermediate wheel *l*, which is in gear with the motion wheels, when by rotating the button the hands can be set either backward or forward. The intermediate wheel *l* is planted on the circumference of a circle drawn from the centre of *b*, with a radius to the centre of *h*; this is to enable the hands to be set correctly, and to prevent them from being shifted when the wheel moves out of action from the other (as would be the case were it to move in and out in an oblique direction); the additional play of the extra wheel also furthers this object. The depths of the wheels *i* and *h* with *g* and *l* are adjusted by means of an oblong slot cut in the bar *c* which receives the head of a small screw fixed in the plate; neither of these depths should be pitched deep; for setting the hands it is not necessary, and that with the wheels *i* and *g* has a tendency to become deeper, the action of winding pressing the end of the bar towards *g*. The intermediate wheel *b* should be just free of the teeth of the small wheel *h* when the winding button is turned the reverse way; if it is at a greater distance from it the push piece *p* will be too long. The spring *s* must be strong enough to keep the push piece in its place. The winding pinion *o* has no fitting in the movement like the stem to the Swiss keyless work, but is fitted in the pendant of the case; it may have the teeth cut straight on its face or on a bevel; either will make a smooth action if the pinion is the proper size, but the bevelled teeth are better and stronger. (*See* page 52.)

If the watch is to have a hunting case where the cover is released by pushing in the winding button, the pinion and the stem on which the button is fixed must be in separate pieces, and, as it is not possible to get a large hole in the pendant, it is necessary to be very careful in arranging the sizes of the stem and the pinion arbor to keep them sufficiently strong. If the hole in the pinion arbor, or pipe, is left round, two oblong slots are cut in it opposite to each other, and a pin through

the stem projects into them flush with the outside of the pipe; this pin carries the pinion round when the button is moved, and at the same time allows the stem sufficient action in the pinion to press in the case spring and release the cover which the spring holds down. The play allowed or the length of the slot should be as little as possible, as the winding buttons are the reverse of ornamental, and should be worked as close in to the middle of the pendant as possible, as if left near the middle of the bow, as they often are, they are awkward to wind and most unsightly. This is a very good way of fitting a pinion, if done carefully. The pipe of the pinion must not be left too thin; the hole in the stem must be broached and the pin carefully fitted and hardened and tempered, care being taken that it does not project at the ends beyond the outside of the pipe.

The winding pinion is also often made with a square hole in it, and the lower part of the stem fitted to this square; when done in this way, the pinion face is hollowed out, the pinion being kept in its place by a small nut screwed on to the end of the stem and fitting the hollow in the pinion face; sufficient play must be allowed for pushing in the case spring and releasing the cover. The winding button is let on to the upper part of the stem, which is squared to receive it, and kept in its place by a nut or a screw, countersunk, but the nut is much better and stronger, and a screw should never be used.

There is a cheaper way of making the rocking bar keyless work by putting the bar on the top of the wheels, as there is then no necessity for pipes to carry the two small wheels nor screws to keep them in their places, the wheels being merely fitted to pins screwed into the bar, and lying on the plate when the face of the watch is upwards; but this method, although often adopted, is a very bad one, since it brings the winding wheel so near the centre of the pendant that only a very small winding pinion is possible, the saving of labour is not great and certainly not worth the sacrifice of principle involved.

181. **Fusee Keyless Work.**—The demand for keyless watches, which has arisen within the last few years, has greatly reduced the number of fusee watches made in England, on account of the greater trouble involved in applying the keyless mechanism to them than to those with the going barrel. The reason for this is that whilst the arbor of the going barrel remains stationary, except during the time of winding, the fusee and its arbor are continually turning one way in the going of the watch and the reverse in the winding; the keyless wheels must, therefore, be detached from the fusee when it is not being wound, which necessitates a somewhat complicated winding mechanism. Many very ingenious contrivances for this purpose have been devised; but the majority of them, owing to their being complicated and liable to get out of order, have served only to make the fusee keyless watch unpopular. No winding arrangement for this watch is of the least use that is not strong and simple, and I only know of two or three that comply with these conditions.

Fig. 59 is a diagram of a fusee keyless arrangement, which I have made and tested for many years, and found to answer admirably; the merit of its invention has been claimed by several people. It is stronger than any other I know of, and has the great advantage of having the winding wheel and the wheel on the fusee arbor always in gear with one another, which obviates the risk of the teeth butting and stripping on these wheels coming into action (a fruitful source of failure in keyless watches with a shifting wheel, such as in the rocking bar mechanism, when improperly made). It is not difficult to make, the only part of it requiring great accuracy being the spring $x\ x'\ x''$ in the wheel on the fusee arbor. The winding wheel W turns on the stud S, which is screwed to the plate through the rocking bar, as in the previous arrangement. The detachment of the fusee while the watch is going is effected by the compound wheel R, shown in detail in Fig. 59, A, B, C, and in elevation

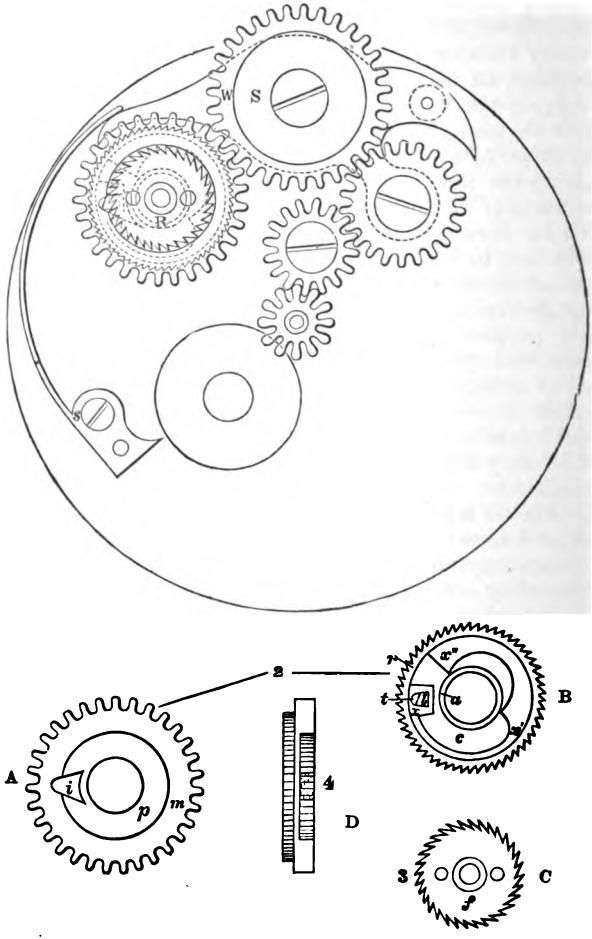

Fig. 59.—Fusee Keyless Work.

in D. When the push piece is released, the spring *s* presses the end of the rocking bar into the ratchet wheel *r*, and prevents it from turning when the watch is being wound, acting as a click when the button is turned the reverse way; the point of the bar is properly shaped for this purpose, and should not extend beyond the point where a tangent, drawn from the centre of the winding wheel, touches the circumference of the ratchet wheel, or it will be liable to be driven out during the winding. The ratchet wheel, *r* (Fig. 59, B), has a sink turned in it, into which a spring, $x\ x'\ x''$, is fitted; this spring has a boss, *t b*, rising out of its plane. The wheel *m* (Fig. 59, A), has a large hole turned out of its centre, and fits over the central ridge, *a*, which is left standing up from the middle of the ratchet wheel *r*, upon which it can turn, and a triangular space, *i*, cut in it, into which the boss on the spring projects flush with the countersink, and a further projection, *t*, forms a tooth and comes flush with the upper side of the wheel *m*. The ratchet wheel, *f*, (Fig. 59, C) fits into the countersink just free of its edge, and screws on to the end of the fusee arbor, on which a right-handed thread is cut, and prevents the other wheel from rising from the plate. Upon turning the button in winding, the wheel *m* (Fig. 59, A), is turned to the right; the point of the rocking bar prevents the ratchet wheel *r* from turning, and the inclined plane of the triangular space, *i*, forces the boss, which projects into it, down it until the projecting tooth, *t*, slides into a space of the ratchet toothed wheel *f* (Fig. 59, C), which it then forces round and turns the fusee; when the button is released, the spring, $x\ x'\ x''$, returns to its former position, and the fusee is completely detached from the winding work, the wheel *f* turning with it on its arbor without affecting the other wheels. The spring, $x\ x'\ x''$, must be of such a shape between the points, x' and x'', that it will be strong enough to keep it friction tight in the wheel *r*, and it must be weak enough between the points x and x' to allow of the tooth,

t, being drawn into the wheel, *f*, before the spring is drawn round in the winding; it should also be strong enough to prevent any slight action of the button in wear from driving in it, or it will interfere seriously with the good performance of the watch; but it must not be too strong, or it will make the winding hard. By adopting the arrangement shown in Fig. 59 of having a small intermediate wheel on a stud screwed into the plate, and the minute wheel on the other side of the cannon pinion, more room is secured, and a proper-sized minute wheel can be fitted without interfering with the other parts of the watch.

182. **Kullberg's Fusee Keyless Work.** — Fig. 60 shows an arrangement of fusee winding by Mr. Kullberg, the drawing and description of which are taken from the *Horological Journal* of April, 1869:—

A is the fusee wheel, B is the winding wheel, C is the setting wheel, D is the platform, E is the stud for holding the platform and winding wheel with perfect freedom against the plate, F is the spring for holding both the winding and setting wheels out of gear, G is the push pin for setting the hands, H is the elastic screw for preventing the wheels on the platform from revolving until the winding is in gear with the fusee wheel. By turning the winding pinion (which runs through the pendant) to the right (to the left in the figure) the winding wheel moves slightly round the setting wheel C, which is kept stationary through being pushed against the rounded head of the screw H. When the winding wheel is in gear with the fusee wheel A, the pin I, at the end of the platform, touches the outer end of the notch K; and by a little further moving of the platform on the fulcrum I, the setting wheel is lifted free of the screw H, and revolves without any impediment whatever. For setting the hands, the platform guided by the pin I in the notch K, is pushed in so as to make proper depth between the wheels C and M. At this position the platform touches the pin L, thereby preventing the

winding wheel from touching the fusee-wheel in the act of setting. Locking the keyless work out of action,

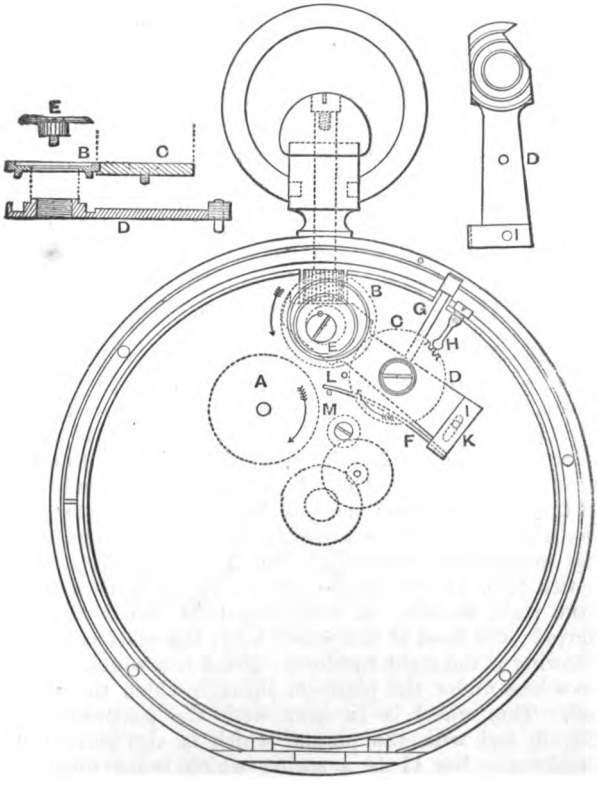

Fig. 60.—Kullberg's Fusee Keyless Work.

if such is required, is accomplished by causing the cover or back of the case to push in the push pin slightly, thereby releasing the setting wheel from the screw H;

the winding pinion will then turn round freely without driving into action—but since the setting wheel can by no means revolve until the winding wheel is in gear with the fusee wheel, the out-driving spring can be made to act with nearly all its power on the winding end of the platform, and consequently drive out with great force; by turning the winding pinion or button to the left, the setting wheel is lifted, so to say, from the screw end H, and passes with a gentle click. If the push pin for setting the hands is required to lock in during setting, a thin spring is fixed inside the band of the case, which slips up between the push pin and the case, and keeps the wheels in gear without pressure of the finger. A fine upright pin at the end of the lock spring causes the cover to push down the spring, and unlocks the push pin.

183. **Chalfont's Fusee Keyless Work.**—The above is a very good keyless work, but is rather difficult to make properly. Another arrangement, invented by Mr. W. W. Chalfont, is shown in Fig. 61; it is the same in principle as the foregoing, and is thus described by him. "The wheel No. 3 always advances in the same position; the pin No. 5 is so adjusted that the wheel No. 3 never presents more than one point at the moment of touching. No. 2 is a platform with a slot (No. 1) cut in the centre, to allow it to move from right to left. A screw regulates the distance so moved; the head of this screw holds the platform down, allowing it the right freedom. No. 3 is a wheel running on a boss under the platform through which the slot is cut. This wheel is in gear with the contrate wheel No. 8, and with the pinion, which is also run on the platform. No. 11 is a spring which bears upon pin No. 14, and throws the platform to the right, and the wheel No. 3 free of the wheel No. 4, which latter is fastened on the fusee, at the same time pressing the pinion into gear with the pin No. 5. If the button attached to the contrate wheel No. 8 is

turned to the right (left in the diagram) to wind, the pinion cannot turn round because the pin No. 5 is between the teeth, therefore the platform is forced across

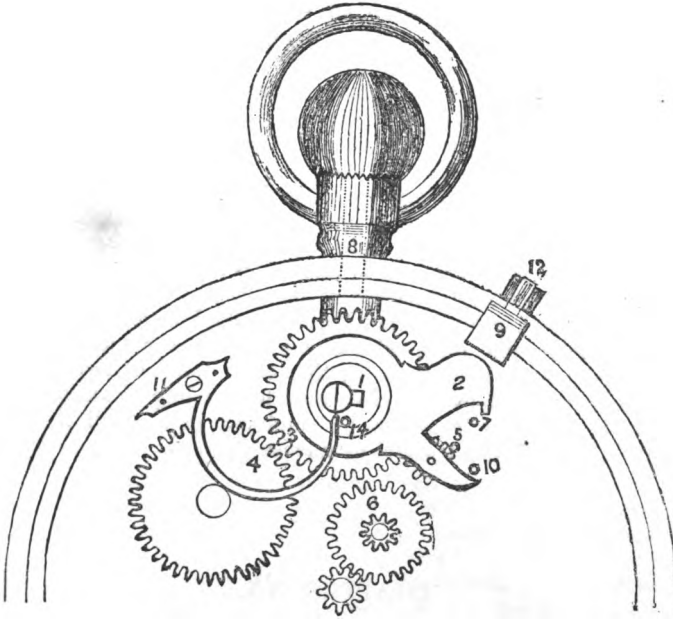

Fig. 61.—Chalfont's Fusee Keyless Work.

from right to left, and the wheel No. 3 into gear with the fusee wheel No. 4. By this time the pinion is drawn free of the pin No. 5, by means of one end of the platform coming against pin No. 10, leaving it quite free to wind. As the button is released it is thrown back again. In turning the button the reverse way the pinion trips over the pin No. 5. For setting hands, when the piece No. 12 is pushed in, it moves the

platform No. 2, and carries the pinion free of the pin No. 5, and straight into the minute wheel No. 6, at the same time bringing the end of the platform round the pin No. 7, locking it free of the fusee. Now the hands can be set. For shutting off this winder, let the case cover move the stud No. 9 on the push piece sufficiently in to free the pinion of pin No. 5."

184. **The Various Forms of Keyless Work.**—There are many other forms of fusee keyless work which it is not necessary to describe, as if many watches should ever be made on this principle it would be better to adopt one form and keep to it. Mr. Kullberg's is said to answer very well, and in one or two instances where I have applied it I have found it to do so. Mr. Chalfont's is very ingenious and seems strong, but I have had no practical experience of its action. In nearly all the fusee keyless watches I have made I have adopted the compound fusee wheel, and have never found it to fail when properly made; the action does not require to be shut off by the case, and the winding is smooth and easy; but it cannot be employed in a small flat watch—at least, it would be unwise to do so.

CHAPTER XX.

PENDULUMS.

185. **The First Pendulum Clock.**—It is somewhat uncertain who was the first to apply a pendulum to a clock, the merit of its application having been claimed by Dr. Hooke, Huygens, Galileo's son Vincenzo, and others, but it is generally agreed by writers on the subject that the first clock with a pendulum was made by a London clockmaker named Richard Harris for the old St. Paul's Church, Covent Garden, in 1641,

or eight years before Vincenzo Galileo claimed to have adapted the pendulum to a clock. This is attested by Thomas Grignion, of Great Russell Street, Covent Garden, the maker of the present clock, who had a brass plate engraved with an inscription to that effect placed in the vestry. This inscription states that the said clock was the first *long* pendulum clock in Europe. That Grignion and his father had every opportunity of inspecting the clock before it was destroyed when the church was burnt, in 1795, there can be no doubt, but that he made a mistake, either in the date of its construction, or in stating that it had a long pendulum, is equally certain, for such a pendulum could not have been applied with the escapement then used.

This has been pointed out by the Rev. H. L. Nelthropp in his valuable chronological Treatise on Watchwork. After carefully summing up the arguments for and against the claims of Harris, Mr. Nelthropp says:—

"1st, That credit ought to be given to Huygens, the Dutch astronomer, for being the first to apply the discovery of Galileo to a clock; 2nd, That Dr. Hooke can justly lay claim to having brought the whole matter to perfection by the invention of his anchor escapement, which enabled him to use a long pendulum with a heavy bob, thereby rendering the arcs of vibration shorter, and necessitating much less motive power."

186. **Isochronism of the Pendulum.**—Soon after the employment of the pendulum for the purpose of regulating clocks, Huygens investigated and established the theory of its isochronism. He discovered that in order to perform long and short vibrations in equal times, a pendulum must describe such a curve that the distance of the mass of a mathematically simple pendulum from the point of rest shall be always proportional to the force acting upon it; and he proved that this condition is only secured by a pendulum oscillating, not in a circular arc, but in a cycloidal curve. In order to compel the bob to traverse that curve, he

invented the cycloidal cheeks—*i.e.*, two metal cheeks, placed one on each side of the suspension spring of the pendulum (which he made very thin, so that it would bend easily to the form of the cheeks), of the shape evolved from the cycloid which the bob would trace. But, for reasons I have already given, these failed to secure the end for which they were designed, although they were a good deal fancied for a time.

187. **The Circular Error.**—A theoretically simple pendulum consists of a heavy weight, having no magnitude, suspended by and capable of oscillating at the end of a rod or cord having no weight.

The discrepancy between the time of a pendulum vibrating in a circular arc and its true theoretical path is known as the "circular error."

This error must have been of considerable importance in the clocks constructed at this period, with their crown wheel escapements, light pendulums, and long arcs of vibration; but subsequently, upon the introduction, about 1680, by Dr. Hooke, of the recoil escapement, with a longer and heavier pendulum, and consequent shorter arcs, the difference was found to be hardly observable. In fact, it is actually useful in counteracting a tendency to gain in the long arcs which exists in this form of escapement; while in the dead-beat escapement the arc is so short that the actual and theoretical paths are practically identical.

188. **Time of One Swing of Simple Pendulum.**—The time of vibration of a pendulum varies with the square root of the length, and the following is the mathematical formula usually employed for finding the time of one swing of a simple pendulum.

$$t = \pi \sqrt{\frac{l}{g}},$$

in which π is the symbol used to express 3·1416, which is the ratio of the circumference of a circle to its diameter; l is the length of the pendulum in feet, and g the acclera-

tion due to gravity of a body falling in vacuo, which is 32·2 feet per second in the latitude of London. Substituting these values in the above equation with one second for t, we find the length of the seconds pendulum to be

$$\frac{32{\cdot}2}{(3{\cdot}1416)^2} \text{ or } 3{\cdot}2616 \text{ feet.}$$

The value of g varies slightly in different latitudes, increasing with the latitude and diminishing with the altitude of the place, and consequently the length of a pendulum to oscillate in any given time also varies.

The length of a simple seconds pendulum, *i.e.*, a pendulum taking one second of mean time for each swing, in the latitude of London being 39·1393 inches; it is 39 inches at the Equator, where the value of g is less, and 39·206 inches at the Poles, where it is greater.

The length of a pendulum for any required time may be found, therefore, by multiplying 39·1393 inches by the square of the time required.

Example 1.—To find the length of a pendulum to beat 3 seconds:

$$\begin{aligned} 3^2 &= 9, \text{ and } 39{\cdot}1393 \times 9, \\ &= 352{\cdot}2537 \text{ inches,} \\ &= 29{\cdot}354475 \text{ feet, the length required.} \end{aligned}$$

Example 2.—To find the length of a pendulum to beat $\frac{2}{3}$ of a second:

$$\begin{aligned} \tfrac{2}{3}^2 &= \tfrac{4}{9} \text{ and } 39{\cdot}1393 \times \tfrac{4}{9} \\ &= 17{\cdot}3952 \text{ inches, the length required.} \end{aligned}$$

To ascertain the time in which a pendulum of any given length will swing, we have the proportion

$$l : t^2 :: \mathrm{L} : x^2,$$

in which L is the given length, and

$$x, \text{ or } \sqrt{x^2} \text{ is the time required.}$$

Example 1.—Find the time in which a pendulum measuring 22 inches will swing:

$$39{\cdot}14 : 1 :: 22 : x^2;$$
$$\therefore x^2 = {\cdot}56, \text{ and } x = {\cdot}75 \text{ of a second, the time required.}$$

Example 2.—Find the time in which a pendulum measuring 352·2537 inches will swing:

$$39{\cdot}1393 : 1 :: 352{\cdot}2537 : x^2,$$
$$\therefore x^2 = 9, \text{ and } x = 3 \text{ seconds, the time required.}$$

These calculations give the theoretical lengths only of pendulums, *i.e.*, the actual lengths of mathematically simple pendulums (the nearest approach to which is practically a bob of lead or other metal of great specific gravity suspended on a fine thread of some sort), but as practically the rod has to be made thick enough to ensure sufficient rigidity to resist bending and quivering when it receives impulse, and a heavy bob must be of considerable size, the effective centre of the swinging weight, corresponding to the weight of a simple pendulum, is always situated at some point above the extreme end of an ordinary pendulum.

189. **The Centre of Oscillation.**—This point is called the "centre of oscillation"; it is, in fact, the centre of percussion, that is to say, the point at which a force or resistance must be applied to stop the pendulum suddenly without jarring the other parts or producing any pressure on the point of support, or, more properly speaking, destroying its equilibrium.

This point does not correspond to the centre of gravity of the mass of the pendulum, which is a fixed point, but is always a little below it, but in a long and heavy pendulum with a light rod it is situated so near that point that its position may be approximately determined practically by placing the rod on a knife edge and shifting the bob till it balances at the required length; this operation will give the centre of gravity, and the bob will de found to require very little regulating afterwards.

From the want of uniformity in the shape of a compound pendulum it is difficult to obtain the radius of oscillation mathematically; it is done by dividing the sum of each particle of the mass multiplied by the *square* of its distance from the point of suspension by the sum of each particle multiplied into its distance.

The distance between the centres of suspension and oscillation, or the length of a simple pendulum, to beat any required time may be found experimentally by means of a pendulum having an axis at each end, one of which must be adjustable, thus utilising the fact that the centres of suspension and oscillation are convertible.

When the pendulum has been adjusted to oscillate in the time required, by moving the weight to the other end, inverting the pendulum and adjusting the axis until it beats in the same time, the distance between the axes will be the theoretical length of the simple pendulum for that time. It was with such a pendulum that Captain Kater made some of his gravitation experiments, for which purpose it is still used, but this is not what is called Kater's pendulum, which is a mercurial pendulum with glass jar and rod. The length of a sidereal seconds pendulum in the latitude of London is 38·87 inches; it varies in the same ratio as the mean time pendulum, and its time for various lengths, and length for various times, may be calculated in the same manner by substituting 38·87 for 39·1393 inches as a datum.

190. **Suspension of Pendulum.**—Soon after the introduction of heavier pendulums it was found better to suspend them separately and to connect them with the pallets by passing the rod through a bent piece called the crutch, which communicated the impulse to the rod. This had, indeed, been done by Huygens, who hung his pendulum on two cords between the cycloidal cheeks, but these cords were found to possess disadvantages in the shape of insufficient rigidity (and of friction, even when the cycloidal cheeks were abandoned), and were discarded in favour of the suspension spring. Clockmakers went

so far, when the dead beat escapement was introduced, as to maintain that they could secure isochronism in the vibrations by adopting certain lengths and thicknesses of this spring, tapering it, &c. However, these theories have long since been exploded, and clockmakers now trust to obtain isochronism by constructing their escapements on scientific principles rather than by interfering with the natural harmonic motion of the pendulum. These misconceptions arose chiefly from the custom, still common amongst a good many watchmakers, of confounding the action of the pendulum in its relation to gravity with that of a balance of a watch and its spring, between which there is no analogy, the conditions being entirely different.

The suspension of a pendulum is a very important factor in the performance of a clock, the desideratum, which has now for a long time been recognised, being to obtain the maximum resistance to bending and quivering when the impulse is communicated to the rod, with the minimum of friction and resistance to the free action of the pendulum.

(With a correctly constructed dead-beat escapement the vibrations of the pendulum are practically isochronous up to 6° of arc.)

Since this principle has been fully recognised, various methods have been devised for suspending the pendulum so that its free vibration shall not be interfered with. Amongst others more or less ingenious, I may mention the following contrivance by Vulliamy:—A gun-metal bar was fixed firmly to the top of the pendulum rod at right angles to it; this bar rested on a knife edge, or knife edges, the greater part of the weight of the pendulum being kept off the knife edge by four counterpoising weights which were attached to the bar by cords that passed over pulleys fixed above the suspension. Many years ago a two-seconds pendulum with a very heavy bob was suspended in this way to a large public clock in Glasgow by Benjamin Lamb, a very ingenious

clockmaker, who had been for many years in Vulliamy's employ; but with such an arrangement, the axis of suspension must be above the pallet axis, and the pallet and crutch will consequently move through a larger arc than the pendulum, which entails friction at the fork; in addition to which the friction of the cords, &c., fully compensates for any advantages of a knife-edge suspension.

I believe the pendulum referred to has since been replaced by one with the ordinary spring suspension.

Other contrivances were tried with more or less success, with the result that the spring has proved superior to them all, and it is now the only method of suspending the pendulum in use, with the exception of that employed in some of the small French timepieces, in which the crutch is prolonged to form the rod, and a knot screwed on to the end of this forms the pendulum bob.

John Whitehurst, of Derby, suspended his pendulums from the pallet axis in large turret clocks, which answered very well with the escapement he used, which was the pin wheel. Referring to this, the late Charles Frodsham, who from his many exhaustive experiments with the dead-beat escapement is a high authority on this subject, said he made experiments with the Graham escapement so applied, but with unsatisfactory results, and that doubtless the pin wheel was better adapted for this mode of application.

The strength of the suspension spring, length of the crutch, and the length and weight of the pendulum, are directly dependent on one another. The axis of suspension should be fixed so that the bend of the spring will be opposite the pallet axis.

The crutch should be as short as possible in proportion to the length of the pendulum, so that it does not affect the spring, or cause it to bend in the reverse direction to that in which the pendulum is travelling, when the impulse is communicated to the rod through

the fork, as was sometimes noticeable in the very long pendulums formerly applied to the old turret clocks. This quivering of the spring at the moment of the impulse being given is seldom observed now that it has become a rule never to apply a pendulum of more than two seconds.

The 20- or 30-feet pendulums were formerly applied to turret clocks with the idea of better overcoming irregularities of impulse, &c. They are, however, never used now; the shorter pendulums require less impulse and less compensation, and are less liable to disturbance from the external influences of wind and atmospheric changes, not to speak of the difficulty of finding room for the long pendulum in the turret. The necessary control over the clock is now obtained by using very heavy pendulum bobs.

For regulators, the one-seconds pendulum is never exceeded, and is generally adhered to, being a convenient length; but of course any decrease of the length of a pendulum is attended with a greatly increased effect of errors in the escapement, shake in the holes, &c.

191. **Pendulum Cock.**—Another point of the most vital importance to the good performance of a clock, and one that is not always carefully attended to, is the manner of fixing the pendulum cock or bracket. In turret clocks with a heavy pendulum bob this should either be built into the wall opposite the clock, or bolted through it in a very firm manner, as if this is not carefully attended to the centrifugal force of the bob will cause a slight rocking motion of the bracket to take place, and, however small the arc, a slight falling off in the extent of the vibrations will be observable. If the spring be not securely fastened at the end to the cock or bracket, the same effect will of course take place.

The pendulum cock of a regulator should be securely bolted to the back of the case, which should not rest on the ground, but be fixed to a permanent wall of the room, and the back should be suitably substantial—not

less than $1\frac{1}{2}$ inches in thickness. Reid recommends that a bracket be in this manner fixed to the wall, and the movement screwed or bolted to it, the front of the case being capable of being pushed on or pulled off; and this is the method adopted in all the best regulators, which are in addition fitted with an inner case, baized at all the edges and crevices, to exclude dust.

There is another error of the pendulum caused by the variation in density of the atmosphere, and consequently in the resistance to the pendulum's motion through it.

192. **Pendulum Bobs.**—Various-shaped bobs have been from time to time devised, the most common in all the old clocks being the lenticular or lens-shaped which has been recommended by Reid and others. If exactly made this would not be a bad form for the bob, but it is a very difficult one to form accurately, one of the convex sides being invariably more protuberant than the other; or, if these are properly divided, there is another difficulty in getting the hole exactly in the middle of them. Any inequality of this kind will cause the pendulum to have a twist at every swing, and prevent the good going of the clock; for this reason pendulums are now nearly always made with cylindrical-shaped bobs, which is also a convenient shape for compensation pendulums.

193. **Barometric Error.**—The error caused by variations of the density of the atmosphere is called the "barometric error," and various methods have been tried for its correction, such as causing the pendulum to vibrate in a vacuum, fixing small barometers to the pendulum rod, &c.; but the first of these could hardly be adopted in turret clocks, and in the latter the adjustment is very troublesome. The best plan is to make the pendulum describe so large an arc that the circular error will correct the barometric. This has been adopted by Sir E. Beckett in the great Westminster clock, in which the pendulum describes an arc of $5^\circ\ 30'$ at each swing, which is found to absolutely correct it.

194. **Regulation.**—The usual mode of regulating pendulums is by a nut at the end of the rod, by the screwing up or letting down of which the pendulum is made to vibrate faster or slower as required, and this is a sufficiently efficient arrangement for ordinary house clocks. But in clocks where it is difficult to get at the pendulum to perform this operation, such as quarter clocks, the regulation is usually effected by turning an arbor, the square of which projects through a hole in the dial, at the other end of which a pinion is fitted, which gears into another pinion or wheel fitted to a screw, which is fixed to the top of the suspension spring in such a manner that by turning it it raises or lowers the spring through the chops, altering the effective length. This is the method of regulating most of the ornamental French drawing-room clocks. But for turret and astronomical clocks the first method is objectionable from the necessity of stopping the pendulum in order to regulate it, which is found to affect the rate, while in the latter it is difficult to fit the spring in the chops so nicely that it can be drawn up by the screw and down by the weight of the pendulum, and be at the same time so rigid as not to allow of any play taking place. The general way of effecting the temporary regulation of turret clocks is by placing small weights on a platform left for the purpose some distance up the rod above the centre of oscillation, adding to them to accelerate and taking from them to retard the vibrations. In a compound pendulum with a conical-shaped bob the top of the bob should be tapered up to a cone. If left flat the dust which will accumulate will accelerate the motion.

CHAPTER XXI.

COMPENSATION PENDULUMS.

195. **Ratio of Expansion of Metals.**—The following is the expansive ratio of the different metals capable of being used in the compensation of pendulums, with regard to one another, taking mercury as the unit :—

Mercury (in bulk)	·000	Iron (wrought) .	·070
Lead . . .	·175	Iron (cast) . .	·066
Zinc . . .	·170	Steel (soft) . .	·062
Tin . . .	·117	Steel (tempered) .	·065
Brass . . .	·100	Glass . .	·046

196. **Mercurial Compensation Pendulum.**—Graham was the first to conceive the idea of counteracting the effects of the lengthening and shortening of the pendulum by the expansion and contraction of the material composing it in heat and cold, by utilising the known different expansibility of various metals in its construction, by means of which the centre of oscillation could be kept at the same distance from the point of suspension and the time of the vibrations constant. This idea resulted ultimately in his invention of the mercurial pendulum, of which Fig. 62 is one of the most approved and generally constructed patterns for regulators and astronomical clocks. M is a glass jar containing mercury, S the sole of the stirrup, countersunk, on which it rests, T is a metal top fitted tightly over the jar to exclude dust, etc., the projecting portions of which embrace the sides *s s* of the stirrup, and K is the nut at the end of the rod *r*, for regulating the final adjustment of the length of the pendulum. The point attached to the sole S indicates on the degree-plate fixed to the back of the case the arc through which the pendulum oscillates, while the point C attached to the top of the stirrup frame points to the divisions marked on the timing nut K, by

means of which the regulation is facilitated. Charles Frodsham recommended a steel jar instead of a glass one, as being a better conductor, with the rod dipping into the mercury, "so that the whole is almost simultaneously affected by changes of temperature." In reference to the steel jar Reid says: "A jar of this kind, from its being made thin (for it would be heavy were it as thick as a glass one), would be easily affected by the changes of temperature, and mercury being still more susceptible of these changes, the operation of counteracting the effects of them might be too sudden," in addition to pointing out the danger of a steel jar becoming magnetised; but this, even did it occur, would not affect the going of a clock with a properly-suspended pendulum and, now that it is admitted to be better to use considerably heavier bobs than were customary in Reid's time, the relative weights of the jar and its contents would be much the same. There is little doubt that for the 40lb. pendulum spoken of by Sir Edmund Beckett, glass jars would be utterly unsuitable, as there would be great difficulty in getting them made perfectly true and fixing them to

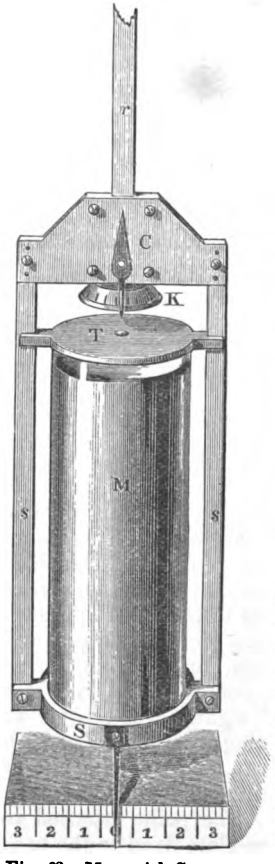

Fig. 62.—Mercurial Compensation Pendulum.

the pendulum so that the mass would be proportional on both sides of the plane of its vibration, to say nothing of the difficulty of handling so great a weight in a glass jar; and for such pendulums, where mercury is employed as the compensator, steel or, still better, cast-iron jars, should be used (brass, or other metal than iron or steel, could not be employed, as the mercury would in time dissolve it); but for regulators and other good clocks where this form of compensation is adopted, with one-seconds pendulums, there is no reason for changing what has answered so well and looks so handsome.

In calculating the height of a column of mercury the expansion sideways of the jar has to be allowed for, but as any calculations for this purpose can at the most be only approximate, the final adjustments of the pendulum, both for compensation and length, requiring to be made after the clock is going, I will put down the proportions of a good mercurial pendulum.

	Inches.
Total length from the top of acting part of the spring	44·0
Height of jar	8·0
Inside diameter of jar	2·5
Height of column of mercury	7·5
Weight of ditto	about 14lb.

The rod and stirrup frame should be of suitable substance and rigidity, and may be of either round or square steel, as, although some stress has been laid on the advantages of the former over the latter shape for the rod, there is practically no difference, and the shape may therefore be left to the taste or fancy of the maker.

The expansive ratio of mercury to steel is about sixteen to one, and, with the dimensions given, the rise and fall of the mercury in the jar, allowing for the side expansion of the jar, are nearly six times as much as the lengthening and shortening of the pendulum in heat and cold, which, subject to slight final adjustments, will maintain the radius of oscillation constant.

The screw upon which the regulating nut, K, is fixed

has thirty threads to the inch, and the nut is divided into thirty, each division being equal to about a second in the daily rate of the clock. Formerly, clockmakers had always to add to the height of the mercury deduced from their calculations in order to obtain sufficient compensation, which was attributed to the extra stiffness of the pendulum spring in cold, and *vice versâ*. This, as Sir Edmund Beckett observes, was a most inadequate cause, considering the thickness of the spring in relation to the weight of the pendulum, and he points out that it resulted from a mistake originally made by Francis Baily, P.R.A.S., in neglecting the weight of the jar itself in his calculations. Sir Edmund says :—"The weight of the glass jar and rod may be a sixth of the ultimate or corrected weight of the mercury, and about so much more height must be added for it, as it is evidently much the same as if all the bob of pendulum were mercury, but its rise only five-sixths of its real amount. And approximately that is near enough, seeing that pendulums vary in their proportions, and must be finally adjusted by trial."

197. **The Gridiron Pendulum** was invented about the year 1726 by Harrison. It consists of nine rods, five of steel and four of brass, so attached to cross pieces that they expand and contract in contrary directions, and so keep the bob at the same distance from the suspension.

The co-efficients of expansion of the metals usable for pendulums, or the fraction of a foot which a rod, which is one foot at the freezing-point, expands for a rise of 1° F. are as follows :—*

Glass . .	·0000480	Brass . .	·0001042
Platinum .	·0000485	Silver . .	·0001058
Steel . .	·0000697	Lead . .	·0001640
Copper . .	·0000952	Zinc . .	·0001653

* From recent experiments it has been found that the co-efficient of expansion for zinc generally given is too high. If the ratio in the above table, for example, were taken as the basis of calculation for the dimensions of a zinc and steel pendulum, we should have a length of zinc of 28·5 inches, which would be too great.

The following are the lengths of rods prescribed by Cumming:—

	Inches.
Outside steel rods from pin to pin . . .	29·5
Middle steel rod from the upper end of pendulum spring to pin at lower end . .	31·5
Inside rods from pin to pin	24·5
From the pinning of the lower end of outside steel rods to the centre of the ball . .	5·0
Total length of steel rods . . .	90·5
Outside brass rods from pin to pin . . .	26·87
Inside do. do. . . .	22·25
Total length of brass rods . .	49·12

Reid found, however, that with these proportions the pendulum was rather undercompensated, and recommended a total length of steel of 112·568 to 71 inches of brass. The total lengths should be inversely proportional to the coefficients of expansion for the metals used. These pendulums have now for a long time been quite superseded by the mercurial in regulators, and are only to be met with in old clocks.

A cheap and effective form of compensation is the

198. **Wood and Zinc, or Wood and Lead, Pendulum.**—A wooden rod having a bob of lead, or zinc, resting on a nut at its end, the expansion of the bob upwards in heat compensates for the elongation of the pendulum, and *vice versâ*. Zinc is the better metal of the two for the bob, its expansion being nearly as much, while it is not so likely to be dented and bruised in handling as lead. Objections have been made to the wooden rod on account of its liability to shrink and warp with atmospheric changes, but this may be to a great extent prevented by using well-seasoned wood thoroughly dried and varnishing it.

Zinc expands in heat about three and a half times as much as deal, and the following are very good propor-

tions for a one-seconds zinc compensation pendulum with a deal rod :—

	Inches.
Length of pendulum from the top of suspension spring to the bottom of the bob . .	44·5
Or to the bottom of the nut	45·25
Height of bob	10·5
Diameter of ditto	2·0
Weight of ditto, 8 lb.	
Acting length of suspension spring . .	1·0
Width of ditto	·45
Thickness of ditto	·008
Diameter of rod	·5

The top of the rod has a brass collar fixed on it, reaching five or six inches down the rod, the upper part of which is solid with a slit in it to receive the pendulum spring.

199. **Zinc and Steel Compensation.**—The first to employ zinc as a compensator was John Smeaton, F.R.S., the engineer who built the Eddystone Lighthouse. As his pendulum had a glass rod and a lead bob which expanded upwards, the length of zinc required was very much less than in the zinc and steel pendulums with cast iron bobs suspended or attached to the rod at their middle, as at present used for turret clocks, for which the glass rod would, of course, be inapplicable.

For all very large clocks this method of compensation is perhaps more suitable than any other, as it is comparatively cheaper and is sufficiently accurate. In fact, Sir G. B. Airy stated that in the standard sidereal clock at Greenwich, to which it was applied, it answered quite as well as a mercurial pendulum, which should never be employed where the bob is required to exceed twenty pounds in weight.

The construction of the zinc and steel pendulum is so simple that I have not thought it necessary to give a figure of it. It is comprised of a hard-drawn zinc tube fitted accurately (but not so as to bind it) over the pendulum rod, resting on a nut at the end. Enclosing the zinc, and fastened to it at the top, is another tube of

iron or steel, at the lower end of which the bob is fixed. To prevent the bob and tubes from turning when the pendulum is adjusted, a flat part of the rod is filed away and a pin is fixed through the zinc tube.

The expansion downwards of the iron tube being the same as the expansion upwards of the bob if it is iron, the lower end of the bob may rest on the nut at the bottom of the tube without altering its relative expansion to the zinc compensation; but if a lead bob be fixed in this manner the difference of its expansibility to that of iron or steel must be taken into consideration from the bottom of the bob to the centre of oscillation. The best way, however, is to attach it at the centre of oscillation, by turning out a larger hole up to that point, so that the bob will slip over the nut at the end of the iron rod and rest on the seat so left. This plan affords a firm bearing, renders the amount of compensation more easily calculated, and obviates any discrepancies which might arise in the compensation in sudden changes of temperature from the slow action of the large body of metal as compared with that of the rod, &c.

To calculate the lengths of zinc and steel we have the proportion:

The expansive ratio of zinc : the expansive ratio of steel : : the length of the latter : the length of the former.

For a one-seconds pendulum, taking its length of rod and spring approximately at 45 inches, and the coefficient of expansion as in the ratio of 170 to 65, we have:

$$170 : 65 :: 45 : x,$$

$$\therefore \frac{65 \times 45}{170} = 17{\cdot}2 \text{ inches};$$

this we may take roughly as the length of the iron tube, which we must now compensate for

$$170 : 65 :: 17{\cdot}2 : x,$$

$$\therefore \frac{65 \times 17{\cdot}2}{170} = 6{\cdot}5,$$

$$\text{and } 17{\cdot}2 + 6{\cdot}5 = 23{\cdot}7 \text{ inches.}$$

With this length it is found the pendulum is slightly undercompensated, and it is usual to allow 25 inches for the length of the zinc tube. The result is not easy to get at correctly, on account of the position of the centre of oscillation varying in pendulums of different-shaped bobs, &c., so that it can only be arrived at approximately, even mathematically.

Supposing, however, the bob to be attached at the middle, which we know to be practically the centre of oscillation, and assuming the zinc and iron tubes to be of the same length :

Let l = the length of the steel rod from the point of suspension to the centre of oscillation,
" c = the length of the zinc tube,
" k = the length of the iron tube.

Then taking the numbers, as in the previous proportion, from the table of expansions, we have the equation:

$$\cdot 170\, c = \cdot 065\, l + \cdot 070\, k,$$
whence $\cdot 065\, l = (\cdot 170 - \cdot 070)\, c$,
and assuming l to be 39 inches,
$\cdot 065 \times 39 = \cdot 1\, c$,
and $c = 25 \cdot 35$ inches,
= the length of zinc required.

CHAPTER XXII.

ESCAPEMENTS.

200. **Recoil Escapement.**—Shortly after the application of the pendulum to clocks, the want of a better escapement became universally felt, owing to the irregular performance of those with the escapement then used, and the clockmakers of the day were directing all their attention to that point. It was for the purpose of correcting the want of isochronism in the vibrations of

the pendulum that the cycloidal cheeks (already described) were devised by Huygens, but with no good results, as I have before stated.

About the year 1665, Dr. Hooke invented what is known as the recoil, or anchor, escapement. This was afterwards adopted in a clock made by Clement, a London clockmaker of the time, and, from the good performance of the clock, it speedily became generally made, entirely superseding the crown wheel escapement hitherto used.

This escapement was the first step in the direction of securing isochronism in the vibrations of the pendulum, as it involved a longer pendulum, shorter arcs, a heavier pendulum bob, and less motive power. Consequently, this combination resulted in the pendulum being less controlled by the escapement, and therefore less influenced by variations in the impulse, although the escapement cannot be considered detached in the sense that a dead-beat one is.

The recoil is the escapement used for most English clocks with short pendulums, for which it is well adapted where no very great accuracy is required; it is easily made, and performs regularly where a fusee is used.

But although variations in the impulse produce less alteration in the arc of vibration than similar variations would in the arc of the Graham escapement, which for some time led clockmakers into the belief that it was the more reliable escapement of the two, they affect the time of the vibrations very considerably (the clock going faster for any increase of the motive force, and slower for a decrease), as should be patent to any one without further demonstration, after a little consideration of the form of the pallets and the direction of the forces. Yet after the many years during which the two escapements have been tried, and the experience which has proved undeniably the superiority of the dead-beat, people may still be heard to assert that the recoil is the better escapement of the two.

In Clement's escapement the entrance pallet was convex and the exit one concave, and they were after-

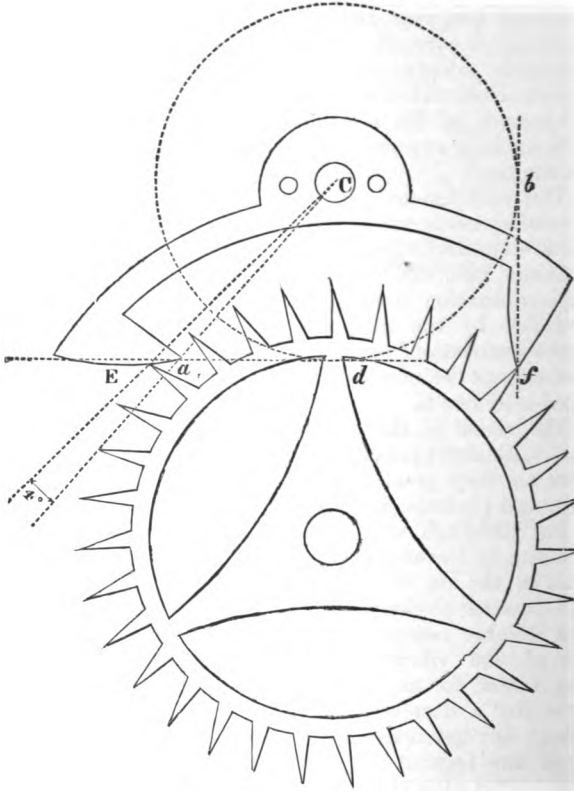

Fig. 63.—Recoil Escapement.

wards made flat, but in both cases were found to cut away very fast, owing to the friction when the recoil takes place; to prevent this, they were subsequently made

both convex, as shown in Fig. 63, which lessens the angle, and consequently, the friction at the recoil.

The action of the escapement is shown in the figure, the tooth at *f* having escaped the pallet, the tooth on the opposite side has fallen on the pallet at E, when, having sustained a recoil, it will give impulse through the angle shown by the lines E C, *a* C, of 4° on the arc described by the pallets; after it has escaped the corner *a*, the next tooth on the right-hand side will fall on the pallet, *f*, which will have intersected the circumference of the wheel 4° in like manner.

These escapements are sometimes very badly planned, the pallet staff often being planted without any reference to the size of the wheel and pallets, and the angles of the impulse curves being afterwards formed according to the fancy of the workman, with equal disregard to the position of the two centres or the number of teeth embraced.

The intersection of two tangents to the wheel at the arc of intersection of the pallets at its circumference will give the exact point for the pallet holes, and lines drawn across the curves, as at E *a d*, *b f*, should be tangential to a circle, *b d*, having a diameter equal to the distance apart of the wheel and pallet centres, when the pendulum is hanging at rest.

201. **Pin Wheel Escapement.**—This escapement (Fig. 64) was invented by Lepaute about the year 1750. It is a very good and simple escapement for large clocks. The impulse is communicated to the pendulum through the pallets M and N by the semicircular pins which project from the plane of the wheel. The resting faces of the pallets are arcs of circles struck from the centre *o*.

The impulse angle is dependent on the length of the pallets from their centre and the angle of their impulse faces; the amount of impulse found practically to be sufficient is about 4°.

The thickness of the pallets and one pin together should equal the space between two pins less the neces-

sary freedom, which is very little; and the distance apart of the extreme points of the pallets should equal half the diameter of the pins.

A line drawn from the centre of the verge upon

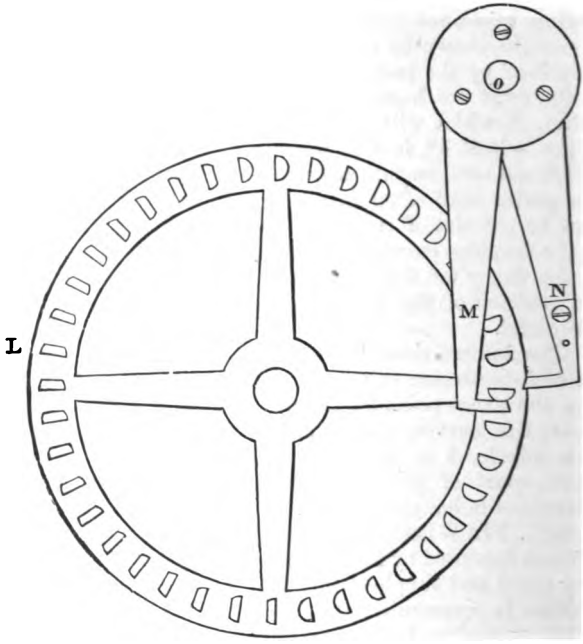

Fig. 64.—Pin Wheel Escapement.

which the pallets are fixed through the centre of the pin which is resting on the locking face of the longest pallet, should be tangential to the wheel at that point. Lepaute's escapement, in order to ensure this tangential action and to render the impulse equal, had pallets of equal length acting on opposite sides of the wheel; but

this arrangement requires double the number of pins, and is not necessary so long as the longer pallet is placed to act on the inside of the pins. Some of his escapements were made with the alternate pins in two rows, each row being a little nearer to the pallets upon which they acted than the centre of the action.

Sir E. Beckett improved this escapement by cutting away a part of the front of the impulse pins, as shown at L, Fig. 64; this permits of shorter pallets, and renders the action safer.

The pin wheel, although a very good escapement for turret clocks, has been quite superseded by the gravity, and is inferior to the Graham, for regulators and smaller clocks. Very few of them are now made.

202. **Dead-beat (Graham) Escapement.**—This escapement was invented by Graham, at the end of the seventeenth century, and is the one generally applied to all the better clocks with seconds pendulums, for which it is best adapted. It was the direct outcome of Dr. Hooke's recoil escapement, after the capabilities of that escapement were known, to which it is infinitely superior for the clocks to which it is applied. Fig. 65 shows the proportions which are at present adopted in all the best escapements. The pallets are made to embrace eight teeth of the escape wheel, and, as in the lever escapement, may be made either with equidistant lockings, semi-equidistant, or circular, as in the figure. The locking faces are made concentric with their axis.

The pallets of this escapement were formerly made to embrace as many as fifteen teeth, but as it was found that after the clock had been going for some time the thickening of the oil on the resting faces affected the rate, it was deemed advisable to reduce the run on these as much as possible, and pallets embracing fewer teeth were adopted, with the result that the present proportions were found practically the best, as when made closer they were not safe, owing to defective workmanship, shake in the holes, &c. In the best clocks the pallets are always

jewelled, as are the pivot holes of the staff. With

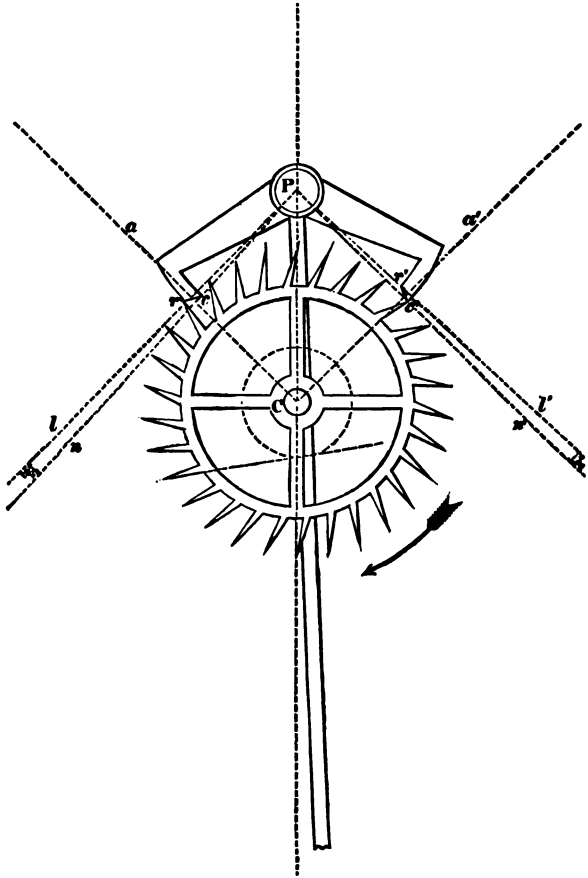

Fig. 65.—Dead Beat (Graham) Escapement.

pallets embracing eight teeth of a thirty-toothed wheel,

the proportions of the pallets and position of the staff holes with regard to the wheel are readily determined.

The wheel teeth are made as thin as is consistent with due strength, and are cut away at their faces about 12° from the radial, so that their points only touch the resting faces of the pallets, and the pallets are made half the thickness of a space between one tooth and the next, less the drop, which should only be just sufficient to insure freedom.

The escaping arc depends upon the length of the pendulum; with a one-seconds pendulum 4° are usually allowed, 2° on each pallet, which is divided into 1½° of impulse, and ½° of rest. With an escapement of the above proportions, radii intersecting the centre of the impulse planes will form an angle of 90°, and tangents to these radii at the circumference of the wheel will form a square; the point where they intersect being the position of the pallet staff holes, which may also be determined by taking the distance of the chord of the arc of 90°, at the circumference from the centre of the escape wheel.

Mr. Frodsham said that when the dead-beat escapement has been mathematically constructed, and is strictly correct in all its bearings, its vibrations are found to be isochronous for arcs of different extent, from 0·75 of a degree to 2·50 degrees; that injurious friction does not then exist; that the run up on the lockings has no influence, nor is there any friction at the crutch; that oil is not absolutely necessary except at the pivots; and that there is no unlocking resistance, nor any inclination to repel or attract the wheel at its lockings.

Professor Airy, in a paper on this escapement, says there is no friction when the arc of escapement is equal on both sides; and this has been construed by some of their advocates as an argument in favour of equidistant lockings, and by others of equidistant impulse planes or circular pallets, but with no reason, as it applies solely to the angular velocity of the pendulum at each vibration, with regard to which Mr. Frodsham says:—"Much

difference of opinion has been expressed upon the construction of the pallets, as to whether the lockings or circular rests should be at equal distances from the pallet axis, with arms and impulse planes of unequal length; or at unequal distances from the pallet axis, with arms and impulse planes of equal length. In the latter case the locking on one side is 3° above, and on the other 3° below the rectangle, whereas, in the former, the tooth on both sides reposes at right angles to the line of pressure, but the length of the impulse planes is unequal. When an escapement is correctly made upon either plan, the results are very similar, though I decidedly prefer the pure right-angled locking, although the arm of one pallet is longer than the other by the thickness of the pallet. The angle at the tooth will, however, be the same."

As in the lever escapement, the balance of opinion is in favour of circular pallets, and as there are no real advantages in the one form over the other in a properly-constructed escapement (*see* pages 190–4), the difference, if there is any, being so slight that it cannot be perceived in the results, the trade do right in adhering to the form which can be most conveniently made.

203. **Conditions of Isochronous Vibration.** — Mr. Frodsham, referring to Mr. W. J. Frodsham's pendulum experiments, and Mr. Vulliamy's pamphlet on the dead-beat escapement, regretted that the first were made independent of the escapement, and that the latter did not connect it with pendulum experiments; for, he says, "they cannot be separated, no matter the character of the escapement employed, whether gravity, remontoir, detached, or dead-beat." He laid down the following conditions on which alone the isochronous vibrations of the pendulum depend:—

"1. That the pendulum be at time with and without the clock, in which state it is isochronous, 'suspended by a spring.'

"2. That the crutch and pallets shall each travel at the same precise angular velocity as the pendulum,

which can happen only when the arc each is to describe is in direct proportion to its distance from the centre of motion—that is, from the pallet axis.

"3. That the angular force communicated by the crutch to the pendulum shall be equal on both sides of the quiescent point; or in other words, that the lead of each pallet shall be of the same precise amount.

"4. That one or other number of degrees marked by the crutch or pallets shall correspond with the same degree or degrees shown by the lead of the pendulum, as marked by the index on the degree plate.

"5. That the various vibrations of the pendulum be driven by a motive weight in strict accordance with the theoretical law; that is, if a 5 lb. weight cause the pendulum to double its arc of escapement of 1°, and consequently drive it 2°, all the intermediate arcs of vibration shall in practice accord with the theory of increasing or diminishing their arcs in the ratio of the square roots of the motive weight.

"To accomplish the foregoing conditions there is but one point or line of distance between the axis of the escape wheel and that of the pallet, and that depends upon the number of teeth embraced, and only one point in which the pallet axis can be placed from which the several lines of the escapement can be correctly traced and properly constructed with equal angles, and equal rectangular lockings on both sides, so that each part travels with the same degree of angular velocity, which are the three essential points of the escapement." And again, "It is possible to obtain equal angles by a false centre of motion or pallet axis, but then the arcs of repose will not be equal; this, however, is not of so much consequence as that of having destroyed the conditions Nos. 2, 3, 4, for even at correct centres, if the angles are not drawn off correctly by the protractor and precisely equal to each other, the isochronous vibrations of the pendulum will be destroyed, and unequal arcs will no longer be performed in equal times; and I consider

that the quiescent point is not the centre of the vibration, except when the driving forces are equal on both sides of the natural quiescent point of the pendulum at rest.

"Now this is the very pith of the subject, and which few would be inclined to look for with any hope of finding in it the solution of this important question, the isochronism of the pendulum.

"One would naturally suppose that unequal arcs on the two sides of the vertical lines would not seriously affect the rate of the clock, but would be equal and contrary, and consequently, a balance of errors, and so they probably are for the same fixed vibration, but not for any other, because different angles are drawn with different velocities; the short angle has a quicker rate of motion than the long. Five pounds motive weight will multiply three times the pendulum's vibration over an arc of escapement of 0·75°; but the same pendulum, with an arc of escapement of 1°, would require 11·20 lb. to treble its vibration; whence I proved that the times of the vibration varied in the same ratio as the sum of the squares of the difference of the angles of each pallet, compared with the spaces passed over; nor is this a very difficult question to solve mathematically, nor difficult of practical proof."

204. **Frodsham's Tables.**—Mr. Frodsham gives the following tables of the principal parts of the Graham dead-beat escapement for astronomical clocks, suited for an escape wheel of one inch radius and thirty teeth, for each of the several numbers of teeth that may be embraced, from two teeth, or one space, to thirteen teeth, or twelve spaces; "from which tables those for any other radius may be obtained by simple multiplication:—

"Table I.—On the Vulliamy principle, with pallet arms of equal length and circular rests, or lockings at unequal distances.

"Table II.—On the principle of circular rests or lockings at equal distances from the pallet axis and unequal pallet arms.

Graham Dead Beat Escapement.

TABLE I.

Teeth embraced.	Spaces.	Angle at the wheel formed by the radii through the middle of the pallet.	Angle at the pallet axis corresponding to the same chord as the angle at the wheel.	Chord of the two angles at the wheel and pallet axes.	Distance of the pallet axis from that of the wheel.	Radius of the outer rest, or circular locking.	Radius of the inner circular rest, or locking.
		Deg. *	Deg. *	Inches.	Inches.	Inches.	Inches.
2	1	18	162	·3124	1·0111	·2105	·1058
3	2	30	150	·5169	1·0339	·3199	·2152
4	3	42	138	·7157	1·0697	·4357	·3310
5	4	54	126	·9067	1·1208	·5612	·4565
6	5	66	114	1·0878	1·1907	·7008	·5962
7	6	78	102	1·2569	1·2850	·8610	·7563
8	7	90	90	1·4123	1·4123	1·0510	·9463
9	8	102	78	1·5522	1·5868	1·2856	1·1809
10	9	114	66	1·6750	1·8336	1·5911	1·4844
11	10	126	54	1·7796	2·1997	2·0226	1·9076
12	11	138	42	1·8646	2·7866	2·6538	2·5492
13	12	150	30	1·9292	3·8584	3·7793	3·6746

TABLE II.

Angle at the wheel axis.	Angle at the pallet axis.	Chord of the angle at the wheel and its corresponding angle at the pallet axis.	Distance of the pallet axis from that of the wheel.	Radius of the circular rests, or lockings, at equal distances from the pallet axis.	Radius of the short pallet arm.	Radius of the long pallet arm.
Deg.*	Deg.*	Chord inches.	Secant inches.	Tangent inches.	Inches.	Inches.
18	162	·3129	1·0125	·1584	·0537	·2630
30	150	·5176	1·0353	·2679	·1633	·3726
42	138	·7167	1·0711	·3838	·2792	·4885
54	126	·9080	1·1223	·5095	·4048	·6142
66	114	1·0893	1·1924	·6494	·5447	·7541
78	102	1·2586	1·2868	·8098	·7051	·9144
90	90	1·4142	1·4142	1·0000	·8953	1·1047
102	78	1 5543	1·5890	1·2349	1·1302	1·3396
114	66	1·6773	1·8361	1·5399	1·4352	1·6445
126	54	1·7820	2·2027	1·9626	1·8579	2·0673
138	42	1·8672	2·7904	2·6051	2·5004	2·7098
150	30	1·9318	3·8637	3·7320	3·6274	3·8367

"* The number of degrees in these angles in correct escapements is always divisible by twelve with a remainder of six, which is the pallet space.

"It is impossible to examine these tables without the attention being specially called to the numbers peculiar to the plan of escaping over eight teeth upon the true rest principle, in which the following facts appear :—

"(1) That the angles at the wheel and pallet axes are each 90°.

"(2) That the radius of the circular locking is equal to the radius of the wheel.

"(3) That the chord of the opening of the wheel and the distance of the pallet axis from that of the wheel are each equal, and equal to the square root of the sum of the squares of the radius of the wheel, and the radius of the pallet arm at its locking.

"This number, therefore, embraces all the points in Euclid's forty-seventh problem—renders the escapement most easy to delineate and make a working sketch; and were a diagram admitted here, it would probably win for itself the title of the geometrician's number, and so fix it in the mind as to promote its universal adoption.

"The calculations in the above tables are based upon two slightly different plans, which may be thus defined :—

"In No. 1, the centre of the pallet axis, a point of the utmost importance to the correct gearing of the escapement, is found in the point of meeting of the two chords representing the thickness of the pallets prolonged to their intersection; or it may be otherwise described as the corrected tangent of the upper and lower rest.

"In No. 2, the centre of the pallet axis is found in the intersection of two tangents drawn from the points where the said radii of the wheel teeth meet the circle circumscribing them, a construction which makes the circular rests, or lockings, at equal distance from the pallet axis, and requires the pallet arms to be of unequal length.

"In either case, when the centre of the pallet axis is found as here directed, and all the several measures given in the tables have been properly carried out,

the escapement will be found to possess properties and advantages which are not to be obtained by any other method.

"(1) The action of the tooth upon the inclined faces of the pallets will be uniformly the same for each pallet.

"(2) If the line connecting the wheel and pallet axes be bisected, and upon the point so found a circle be described with a radius equal to half this distance, the circumference will pass through the centres of the two axes, and also through the locking points, as each tooth and pallet in action becomes alternately engaged; thus proving that the locking points are angles in a semicircle and consequently *right angles*, and also that the two semi-angles at the wheel and pallet axes will be equal to a right angle, and therefore complements to each other.

"(3) The arc described by the pendulum and that described by the escapement will be perfectly equal, the result of which will be that the same amount of force being constantly transmitted through the escapement to the pendulum, it will be driven though various arcs in equal times, and the pallet, crutch, and pendulum, instead of interfering with each other's motion, will travel together step by step, with the precise angular velocity due to their respective distances from their centre of motion. And because the angles at the lockings are right angles, and consequently perpendicular to the action of the main force, there will be neither draw nor repulse."

Theoretically, the smaller the escaping angle of this escapement, and consequently the run on the dead faces of the pallets, the better, but it is found practically unsafe to make this much less than the angle I have prescribed, namely, 2° from zero, with pallets escaping over eight teeth; and even with this angle the work must be very accurately done and well finished, with no more shake than is absolutely requisite.

Although Sir George Airy concluded that the friction on the dead faces of the pallets did not affect the rate of clocks with this escapement, there is no doubt that any change in the consistency of the oil on these faces will affect it, and Mr. Bloxam, the inventor of the dipleidoscope, attributed all the errors of the escapement to this friction. Sir E. Beckett says:—"Neither would the friction on the dead faces, if it were constant throughout, and if it acted through the same arcs before and after zero, affect the time directly; for while the pendulum is falling the friction acts contrary to gravity, and with gravity while it is rising after the escape has taken place. As it is always resisting the motion of the pendulum, it tends to diminish the arc; and on the other hand, the impulse always tends to increase it, so that here also there is counteraction to some extent; but as the friction on the pallets does not vary in any definite proportion to the force of the train, but sometimes one way and sometimes the other, no useful relation of this kind can be established. All we can say about the arc is that it increases under an increased force or a diminished friction, until the remaining friction on the pallets and the resistance of the air stops the increase."

Although the dead-beat is the best escapement for regulators and astronomical clocks, where a weight is employed as the motive power, it is not so suitable for smaller clocks with shorter pendulums, or where a mainspring is used, as, although its vibrations are isochronous when perfectly made, within centre limits of arc, it is found impossible to make it so correctly that they are unaffected by any alterations in the impulse, and it is found practically that where such variations occur, the escapement will gain with any decrease of force, and *vice versâ*. The recoil escapement, on the other hand, loses with a decrease of force and gains with an increase, and as the two conditions counteract one another, it is the practice to make what are termed half dead-beat

escapements for all but the very highest class of clocks, *i.e.*, having a slight recoil, which is just perceptible in the movement of the wheel backwards at the resting faces of the pallets, instead of making them concentric with their axis. This is the best way of making this escapement for small clocks in which it is employed, which are subject to large variations in the amount of impulse; but I should prefer to rely on a correctly made escapement, and a perfect fusee adjustment for equalising the impulse, in spring clocks of the better class.

To draw the escapement (Fig. 65) :—

From the centre C describe the circle $c\ c'$, and erect the perpendicular P C, this is your line of centres. From the same centre draw two radial lines, C a, C a', at 45° on each side of the perpendicular; the chord of the arc of 90° at the circumference of the wheel will be the distance of the pallet centre from the centre C on the perpendicular, and the lines $l\ r$ P, P $c'\ n'$, will be tangents to the wheel, at the radial, a C, a' C.

If the pallets are to be circular, mark off 3° on each side of the radials, which will give the width of the pallets; and from P draw the lines $n\ c$ P, P $r'\ l'$, 2° below the line, $l\ r$ P, and above the line P $c'\ n'$, which will give the amount of the rest and lift. The angle of rest is not shown in the diagram, to avoid confusion, but the tooth at r is supposed to be resting ½° from the corner of the impulse plane.

Draw the arcs r, c, r', c', and join $r\ c$, $r'\ c'$, and complete the figure.

If the lockings are to be equi-distant, mark off the width of the pallets 6° to the right of the radials a C, a' C, and proceed as directed.

In very highly-finished regulators with light trains of wheels, the weight driving them is sometimes excessive, and the pendulum too light to overcome the consequent resistance, which is increasing, at the locking faces of the pallets, and as the weight used must be sufficiently heavy to overcome any possible increasing resistance of

the train, the pendulum should always be made with reference to this, and should always be heavy enough to prevent the unlocking resistance having much disturbing effect on its vibrations.

CHAPTER XXIII.

GRAVITY ESCAPEMENTS.

205. **Double Three-legged Gravity Escapement.**—This escapement was invented by Sir E. Beckett (then Mr. E. B. Denison) in 1854. It is the best escapement for all very large clocks where the hands are exposed to the action of the wind, &c., as it admits of great driving power being applied without sensibly affecting the escapement, by increased resistance to the unlocking, as would be the case with the Graham and other dead-beat escapements; and, the impulse to the pendulum being given by the weight of the arms in falling through a given distance to which they have been raised, is, of course, constant.

Fig. 66 is a diagram of this escapement. A B C, *a b c* are two wheels in different planes, the lifting pins shown at X being pivoted into and between them. The pallets O N P, O M P act between the wheels in the same plane as one another; the lifting pins acting on the lifting faces after the line of centres, on the long teeth or legs of the wheels being released from the stops N, M, which are placed one on each side of the pallets, and act alternately on the wheels. The pallets are pivoted one on each side of the bending point of the suspension spring.

The action of the escapement is as follows:—The pendulum P is travelling in the direction of the arrow; when it has moved the arm M sufficiently far, the tooth A will escape from the stop M, and the lifting pin will raise the arm on that side out of contact with the pendulum

until it escapes from the lifting face, when the tooth *a* on the opposite side will fall on to the stop N, the arm M falling from where it has been raised, and giving impulse to the pendulum at P, until it is stopped by the next lifting pin; and the pendulum, continuing its course, will raise the arm N in the same manner. A fly is sprung on the arbor to prevent jar from taking place on the teeth coming in contact with the stops, the large arch through which the wheel moves, 60°, at every beat rendering it effective; so that in a well-made and properly-constructed escapement of this kind the stopping is quite dead, and all danger of tripping is avoided.

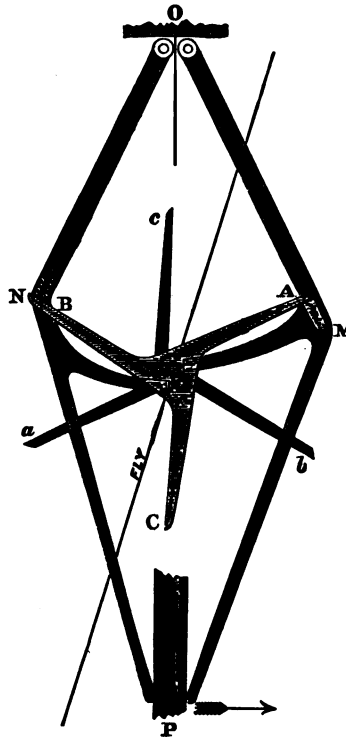

Fig. 66.—Double Three-legged Gravity Escapement.

In great turret clocks, where a very large fly is necessary, the part of the arbor on to which the fly is sprung is left large, or a collet is put on the arbor. Of course, as Sir E. Beckett points out, any increase in the length of the fly renders it more effective than an increase in the width. For obvious reasons, the fly should be made as light as possible, as, indeed, should all the other parts of this escapement.

The wheels and pallets should be cut from sheet steel, and all the locking faces hardened. In some of the very fine escapements the faces of the blocks are jewelled.

The arms of the pallets below the stops may be of any length, but they are generally constructed at the same angle as the upper arms, as shown in the figure. In large escapements, where they must be of considerable thickness, and cannot be bent to adjust the beat, they have adjustable pins or beat screws to come in contact with the pendulum.

To set out the escapement:—With an escape wheel of a given size, draw a circle representing its circumference; from the bottom of the escape wheel, on the line of centres, produced, divide this circle into three, then these three points will be the positions of the acting faces of the three teeth of either wheel when at rest, and the acting faces of the stops. Draw radii from the centre of the wheel to these points, and tangents to the two upper radii meeting above, the wheel will indicate the theoretical point of suspension and the bending point of the spring. The angles X A O, O B X will then each = 90°, and the line of centres will = the diameter of the wheel. Bloxam, who invented a different form of gravity escapement, made the top portions of the arms cranked and pivoted them at this centre. This, however, has been found to be quite unnecessary, and they are now made as shown in the figure, safe locking being secured by placing the stops higher on the arms than their true theoretical places, which increases the angle, and is, in fact, the same as giving a slight draw on them, as is done in the lever escapement by undercutting.

The teeth of the lower wheel are usually set at equal distances between those of the upper, although this is not absolutely necessary, and the lifting pins are set on radii to the acting faces of the teeth of one of the wheels, so as to act across the line of centres, at a distance from the centre not exceeding a twelfth of the radius of the wheel. The lifting pins must be hardened and polished,

and the lifting faces of the pallets must be either hardened and polished or jewelled.

From the comparatively great angle at which the arms are to the line of centres, the distance through which they have to be lifted to give sufficient impulse is less in this escapement than in one with a larger number of teeth acting in the same plane, as the pallets would then hang more nearly upright. This is a great advantage, as the contact is shorter. The unlocking is also easier for the same reason, and from the greater diameter of the wheel in proportion to the other parts of the escapement, the pressure on the stops being considerably less.

The fly is also more effective than where it has less angular motion, which, with the above, renders the locking lighter, and, from the few teeth in the escape wheel, another pinion is necessary, which reduces the effect on the escapement and pendulum of irregularities in the train, and the superfluous power before-mentioned, necessary for overcoming such defects, carrying the hands in all weathers, &c.

206. **Four-legged Gravity Escapement.**—This escapement is also the invention of Sir E. Beckett. It is the same in principle as the foregoing, from which it differs in the following particulars:—

It has only one escape wheel, with four teeth or legs, and two sets of four lifting pins, one on each side. The wheel acts between the pallets, one set of lifting pins acting on the one, and the other on the other; the stops point inwards towards the wheel. The wheel turns 45° at each beat, and its arbor likewise carries a fly. To set out this escapement, draw the circumference of the escape wheel; mark off on this circle $67\frac{1}{2}°$ on each side of the line of centres, and draw radii to these points, which will indicate the positions of the lockings; tangents to these radii, meeting above the wheel, will give the theoretical point of suspension, and, as in the three-legged escapement, safety must be ensured by shifting the stops a little up and down respectively. The lifting

pins, which act on the lower pallet face, are planted on radii to the acting faces of the teeth, the opposite set being midway between them. This secures lifting at the line of centres. They must be planted at not more than a fifteenth of the radius of the wheel from the centre. The pallets do not bank on the lifting pins as in the three-legged escapement, but on two banking pins, which should be planted as near as possible to the centre of percussion, to avoid vibration, in such a position as to allow of a little run taking place before coming in contact with the lifting faces to ensure prompt lifting. The impulse arms of the pallets may be made parallel to the upper arms, and rather longer than shorter. All the parts, wheel, pallets, and stops, must be made as light as possible, and the contact faces hardened or jewelled.

I have not given a figure of this escapement, the principle of which may be understood from the former, to which it is inferior for turret clocks, and, as it requires an extra wheel and pinion, and takes up a little more room than the Graham, it has not superseded that escapement for regulators. It may, however, be easily made, and will give good results if the above points are carefully attended to.

207. **Electrical Clocks.**—In 1840, Mr. Alexander Bain, of Edinburgh, invented a clock to go without weights or springs as the motive power, by the application of electricity to the pendulum; he reversed the order of things in the old clocks, and made the pendulum drive what wheels there were in the train and the hands.

The pendulum bob was composed of a hollow cylinder, containing a large coil of insulated wire, the ends of which ran up the rod, terminating in two springs, upon which the pendulum was suspended, and attached to which were wires which communicated with a small galvanic battery.

Two groups of four or five permanent magnets having opposite poles were fastened together, each magnet close to, but separated from, the next, and fixed to the case, the

like poles of each group being next to and slightly separated from those of the other.

Over these magnets, but without touching them, the bob passed in the oscillations of the pendulum, and the galvanic circuit was completed by a sliding bar, which rested on the battery terminals; this bar, being pushed backwards and forwards by the pendulum in its oscillations, made and broke contact with the different poles, thus reversing the current at each beat, and rendering the pendulum automatic in its action.

The power was communicated to the wheel work of this clock by a propelment in the form of a sort of recoil escapement reversed, with a ratchet wheel and click, as in all clocks where the motive power is transmitted through the pendulum there can be no escapement, properly so called.

Bain's system was much thought of at the time, and he carried on a large clock factory at Edinburgh for some years, afterwards removing to London; but his clocks were failures scientifically and commercially. Being directly controlled by the current from the battery, any irregularity in that caused a corresponding irregularity in the rate of the clock, the friction of the sliding bar also proving a source of failure, and they are now things of the past. But his system was modified and improved by others, and clocks kept going, controlled, and set by electricity came into common use.

About the time of Bain's invention, the late Sir Charles Wheatstone invented another kind of electric clock, where a motor or driving clock actuates a series of dials.

Mr. Shepherd also spent a great deal of time in improving electric clocks, his system being approved and adopted by the late Astronomer Royal, as it gave a kind of gravity impulse to the pendulum. However, all electric clocks that are entirely dependent on the constant action of the current will fail sometimes if provision is not made to enable the clock to go for a time independent of it.

208. **Jones's System of Controlling Clocks.** — This fact became apparent to Mr. R. L. Jones, who,

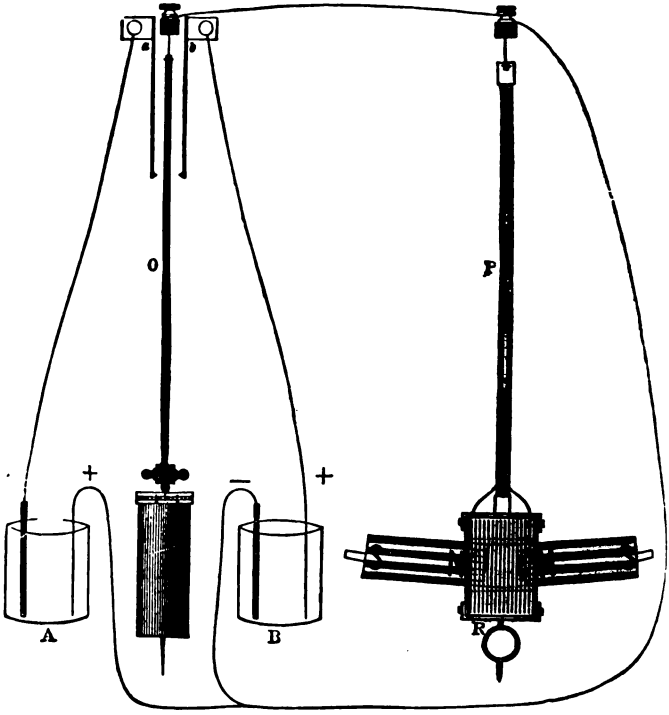

Fig. 67.—Jones's System of Controlling Clocks.

as manager of the railway station at Chester, had found the importance of true time, and after many unsuccessful experiments with electric clocks, he adopted the plan of controlling a Bain's pendulum applied to an ordinary clock by causing the pendulum of an astronomical clock

to make and break contact with the opposite currents at each oscillation, thus transmitting at each beat a positive or negative current through the Bain's pendulum or pendulums, and causing both the normal and controlled pendulums to beat in unison. Moreover, the pendulum being driven by the clock in the ordinary manner, any failure of the electric current did not affect it for some considerable time, provided it did not vary more than one beat before the current was restored.

The following is Mr. F. J. Ritchie's explanation of Mr. Jones's system :—

"Each controlled clock is complete in itself, requiring periodical winding up, and regulated approximately to time, but it is provided with a pendulum, P, constructed similar to Mr. Bain's, vibrating over a bundle, or rather two bundles, of magnetic bars, SN—NS (Fig. 67). The normal clock is furnished with slight springs, *a* and *b*, one on each side of the pendulum, O, which are attached, one to the copper terminal plate of battery A, and the other to the zinc terminal of battery B; the other poles, + and —, of each battery passing by the line wire or through the earth, to one of the suspension springs of the controlled pendulum, P, thence down the rod and around the ball, R, to the second suspension spring, and by the line wire to the pendulum rod of the normal clock.

"When the normal clock pendulum swings and touches the one spring, a current of one kind is transmitted from the battery, A, along the wire, producing an attraction between the one pole of the magnet bar and the wire coil of the controlled pendulum, R, the second battery, B, being meanwhile inactive until the normal pendulum, in its reverse swing, makes contact with the spring *b*, and a current of the opposite nature is transmitted to the controlled pendulum, producing, of course, an opposite result.

"Thus each second by day and night an alternative current of positive and negative electricity is transmitted

along the line and through the controlled pendulums, which most effectually secures the coincidence of beat in the normal and controlled clocks. Should the controlled clocks incline to go too slow, these correcting currents drag them onwards; if too fast, then the currents retard the motion of their pendulums, and perfect coincidence of time is secured."

The success of Jones's plan was at once evident, and it was applied to several of the public clocks at Liverpool, these clocks being controlled by an astronomical clock in the observatory.

Some years ago, before any attempt was made at controlling, and when the time of the public clocks in London was very irregular, the council of the Horological Institute sought to induce the Corporation to establish three public clocks, to be controlled on Jones's system. Sir George Airy offered to supply the current from Greenwich Observatory, and Messrs. Walker and Varley, the eminent electricians, offered every assistance they could render. But the failure of a clock belonging to Messrs. De la Rue, which was controlled on Jones's system, was a sufficient excuse for the Corporation to do nothing in the matter; this clock was, by-the-bye, a very bad one, and has since been removed.

Inventors and people who are enthusiastic in adopting an invention are apt to exaggerate its utility and scope; it was thought that any clock was good enough if it had Jones's controlled pendulum applied to it, and bad clocks have had a good deal to do with the partial abandonment of that system.

209. **Ritchie's Electrical Clock Escapement.** — Mr. Ritchie, of Edinburgh, has been the latest and most successful improver of electric clocks; by his system he is enabled to maintain a number of pendulums in motion by currents of electricity transmitted to them by the action of a normal clock, the action being the same as in Jones's clocks, only there are no weights to the subordinate ones, the vibrations of which are

maintained by electricity alone. As in this case the pendulum drives the wheels and hands, the accuracy of the clock must depend to a great extent on the construction of what in an ordinary clock would be the escapement, and Messrs. Ritchie have invented a number of ingenious contrivances for this purpose. The escape wheel having no tendency to move of itself, the pallets must be so constructed that they will hold the wheel during a portion of the time of the swing of the pendulum, and drive it forward during the remaining portion.

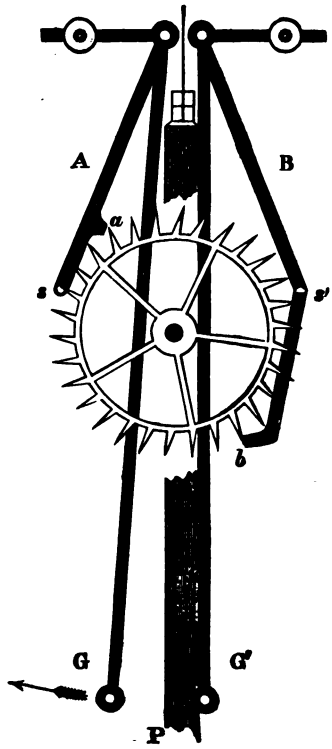

Fig. 68.—Ritchie's Electrical Clock Escapement.

Fig. 68 shows the most approved of Messrs. Ritchie's escapements, or propelments. It consists of a wheel with the usual thirty teeth, the pallets being two gravity arms mounted on separate arbors, and unconnected with each other; the long straight portions of these, G, G′, act as the crutch. The pendulum, P, has just completed its vibration to the right and is returning to the left; the arm of the pallet, resting on the tooth at *b*, is prevented from pressing it forwards by the wheel being locked on the opposite side by the stop, *s*; when the pendulum,

continuing its vibration, reaches G, it will lift the stop, *s*, out of the wheel, and the arm B, *b*, already resting on the tooth at *b*, will press the wheel forwards until the next tooth is stopped at *s'*.

The projecting plane, *a*, acts in the same manner as the end of the arm at *b*, preventing the wheel from going backwards, and pressing it forwards when it is released from the stop, *s'*.

For large clocks, where the hands are exposed to the pressure of the wind, a click and ratchet are added to the escape pinion, to prevent the wheel from being forced backwards when the weight of the gravity arms might not be sufficient to do so.

As clocks with cases sufficiently long for seconds pendulums are sometimes objectionable, Messrs. Ritchie have an arrangement for loading a simple pendulum above its point of suspension, by which means a pendulum can be constructed to vibrate within the diameter of its own dial to any rate desired, on the principle of Maelzel's metronome; both ends of this pendulum have the bobs containing coils of wire passing over magnets as in the longer pendulum, thus securing regularity in the vibrations, which could not otherwise be depended on.

The momentum which these subordinate pendulums acquire while they are being impelled by the current is sufficient to keep them oscillating for some thirty seconds, and consequently, drive the train and hands for that length of time; but if through any accident the motor clock failed to transmit the current, or the clock itself stopped, the subordinate clocks would stop also.

Mr. Ritchie's system, however, is in operation in many places, and has given entire satisfaction for years, and he informs me that he has not found it necessary to make any alteration or improvement in what is herein described.

Messrs. Barraud and Lund have introduced a system of setting or synchronising clocks by means of clips

(actuated by an electric current) catching the minute hand at fixed intervals, which is largely in use in London. The principle is similar to that applied by Bain, the inventor of electric clocks, for a similar purpose. It has been carried out with great energy by Mr. J. A. Lund, and is now worked by a company.

A good deal of practical difficulty has been experienced by the various persons who have tried to set or synchronise clocks in this way, from the want of uniformity in the clocks to be set and other causes, so that, whatever may be the advantages of such a system when employed in large establishments like the Post Office, it is questionable whether in merchant's offices and such places a good clock, that can be procured at a moderate price, and that will keep time without setting for weeks and months together, would not be less expensive and a good deal more trustworthy than common dials set by any automatic system.

CHAPTER XXIV.

HOUSE CLOCKS.

210. **Various Kinds of Clocks.** — Fifty years ago many of the so-called watchmakers in the provincial towns were in reality clockmakers, as the names on so many of the old long-cased clocks testify. The country clockmaker usually had an engine, and could cut his own wheels and pinions, but as these were cut with a straight slit only, they had to be shaped up afterwards by hand with a file. This system was so very primitive that it could not last, but it had the merit of teaching the country watchmakers' apprentices to file and turn, and some of our best watchmakers have been drawn from this class.

These clocks, having invariably seconds' pendulums and long cases, were not sufficiently cheap or portable for the working populations of large towns, and were superseded by the Black Forest, or Dutch, clocks, which in their turn have given place to the machine-made clocks of the American factories. Praiseworthy efforts are now being made to reduce the price of English house clocks, by adopting machinery largely in their manufacture, and it is difficult to explain why this has not been done before. It is to be hoped these attempts will lead to the revival of an industry which has been allowed to dwindle into insignificance.

The French have long held the market for ornamental clocks, not because of the clocks being good in themselves, but on account of the decorative style of the cases. These clocks are generally uniform in size and caliber, and, although there is very little automatic machinery employed in their manufacture, are produced very cheaply.

The imitations of the old English bracket clocks and quarter clocks are failures, owing to their small movements and want of power, but principally to their lacking the adjustment of the fusee, for whatever controversy there may be respecting the merits of the going barrel for pocket watches, there is none as to its fitness for clocks where all the power obtainable is necessary, and, if a clock were made to go eight or nine days only with a going barrel, it would lose several minutes in the latter days of the week. For this reason the French clocks are made to go twenty-one days, so that if they are wound once a week, a few turns only of the spring are unwound, and the pull is kept approximately equal. But in clocks requiring greater driving power this long spring cannot be used, and the unequal pull of the spring can only be got over by the use of the fusee, which is one of the reasons why we keep the making of office dials, &c., in our own hands.

The Viennese and German weight clocks, introduced since the institution of international exhibitions, are

tolerably portable, and should keep good time, but they are not in much demand, as few of them are made to strike the hours. If a factory or factories could be established here with sufficient capital and machinery, there is no doubt we could make clocks cheap enough to compete with all comers. I believe that at present only the movements of the American clocks are imported, the cases and fittings being made more cheaply here; and these movements are poor things. However, until the factories are set up, provincial watchmakers would do well to revive clockmaking, though not exactly on the old lines; and, since the art has to some extent died out, I will describe some of the details.

211. **Eight-day Clocks.**—The brass work of the eight-day striking clock (whether weight or spring) is cast, and should be well hammered before anything else is done to it, the plates and wheels especially. The wheels, and sometimes the plates, are made from hard rolled sheet brass, the former being stamped out. The holes in the centre of the wheels having been drilled and broached to the required size, and the wheels turned true on the edge on a screw arbor, they should be filed flat on the sides, and of an equal thickness, when they are ready for having the teeth cut in them; but it is better (if the proper facilities, such as an engine, exist for doing this work) to cross the arms out first, smooth the sides, and fix them on their arbors before cutting the teeth. The plates, after being well hammered, should be pinned together and made square, then separated and filed flat, and smoothed by scraping them.

The pinions of these clocks are now always made from pinion wire. Sometimes the centre pinion is cut in an engine, but if it is made from the wire, the leaves are left on that part of it which is to form the large front pivot, and softened and forged until it looks solid; this enables the arbor to be left large enough for a shoulder to the pivot. A deep sink is cut on each side of the pinion heads, and the leaves are broken off the

portions that are to form the arbors. This is done by squeezing two leaves together at a time in a strong vice, which saves the labour of filing them off. The arbors are then centred, and turned and smoothed with a smooth file. The pinions also require smoothing, and often the bottoms of the spaces need to be sunk a little more with a file of the proper shape; they are then ready for hardening and tempering. They should be left as hard as it is possible to turn them, and if in hardening the arbors are bent, they may be straightened by striking the hollow side a few blows with the pæan of a hammer on a piece of steel or iron, care being taken to strike the arbor opposite to where it is solidly supported. The pinions and arbors can now be polished as follows:—

Cut a square hole in a piece of hard wood that will just fit the pinion; grip a board of willow or other soft wood in the vice, and, with the aid of the piece of boxwood which forms a couple of handles at right angles to the board in the vice, move the pinion backwards and forwards until the leaves have cut out tracks for themselves, and left little ridges between that go to the bottom of the spaces. By charging the board with emery and oil, and working the pinion along it, the leaves are easily polished, and will not be put out of shape or rounded.

The arbors are first polished with oil-stone dust and a polisher, and finished by tying two pieces of soft wood, charged with fine emery, together at one end, and gripping the arbor between them while it is rotating. This is a very short process; and the pinions can be faced, if that is thought desirable, either with a square polisher or the ordinary facing tool. The wheels are riveted on to brass collets, which are attached to the arbors with soft solder, except the centre wheel, which is riveted on to its pinion.

If the depths be now made in a good depthing tool, the caliber can be drawn by marking them off according to the space at disposal or the size of the frames; the

wheels of the striking train are usually placed in nearly a straight line, one over the other. The fly should be kept quite clear of the pallets, and the centre and escape wheels in a line with one another, if the clock is to have a seconds hand. Before separating the plates, drill the pivot and pillar holes, and open the latter to nearly the required size, when the plates can be separated and the pillars put in. If the plates are to be lacquered, the inside of the pillar plate should be smoothed, and the pillars riveted in at once; but if the plates are to have a high polish, the pillars must be put in temporarily, and should have either a washer under the rivet or a very long rivet left. The plates are polished by pinning them on to a block, and rubbing them smooth with pumice stone and plenty of water, and afterwards with Water-of-Ayr stone, finishing off with a buff and rotten stone and oil.

English clocks have always the rack spur and lifting piece made of steel or iron, but for no adequate reason that I can see. In French clocks these pieces are made of brass, which is more easily worked, and therefore cheaper; and in any rational system they would be stamped out.

212. **The Striking Train.**—Planting them is almost arbitrary. The rack must be planted close to the pivot hole of the third wheel in the striking train, the lifting piece being in such a position that the end which projects through the plate will catch a pin in the rim of the fourth or fly wheel. The rack hook should be planted so that it keeps one or two teeth of the rack to the left, or in front, of the third wheel pivot hole, and at a right angle to the rack. The rack should have thirteen or fourteen teeth cut in it and must be the segment of a circle, but the first tooth should be a little longer than the others, in order that when the hook is lifted over that tooth it may clear all the others when the clock "warns" (*i.e.*, the noise made by the rack arm falling against the snail a few minutes before the clock strikes).

If the clock is required to strike "one" at the half-hour, the first tooth must be lower than the second one, and the pin in the minute wheel so placed that it will lift the hook over only one tooth for the half-hour. The teeth of the rack should be cut in an engine, but if they are marked with a double-edged spacing punch they can be cut by hand sufficiently accurately; in fact, that is the method of cutting the teeth on the racks of the finest repeating watches. The snail is usually carried on the hour wheel, and the steps on it are marked by the pin in the rack arm, the rack spur being shifted from tooth to tooth and held tightly in each, while the snail is moved round, and the pin in the rack arm marks it. The uniformity of the teeth of the rack being unimportant so long as they coincide with the steps on the snail, the length of the steps is determined by bringing the pin in the minute wheel against the back of the arm of the lifting piece, and marking the snail with dividers from any convenient point. The arm of the lifting piece is made of hard hammered brass, and should be sufficiently weak to allow the pin in the minute wheel that lifts it from the front side to pass under it if the hands are turned backwards; the arm can either be twisted, or have an ear left on it to enable this to be done.

The rack arm is also of hard brass; it should be thin, and have the pin in it made of such a shape that it will ride over the snail in the event of the clock missing to strike "twelve;" the face of the snail should be bevelled off for this purpose, as if it does not ride over it *the clock will stop.*

The rack lifting piece and rack spur have long brass collets riveted into them, to which studs are fitted that are screwed into the plates, and are kept in their places by small pins put into the studs above the collets. In English clocks the hour wheel is not fitted to the stem of the minute wheel, but to a bridge that is screwed to the plate over the minute wheel, and as the hour hand is generally fixed by a small screw to the boss of the hour

wheel, the wheel should be keyed on to this boss to enable the hour hand to be shifted.

In clocks with small, or even twelve-inch, dials, I see no reason why this bridge should be used; in French clocks it is always dispensed with. If the hour wheel were fitted on to the pipe of the minute wheel it would improve the appearance of the dial by keeping the centres of the hands smaller, and a pipe to the hour hand is a more convenient method of enabling it to be set with the minute hand than shifting the minute wheel in putting the clock together.

When the clock is required to repeat the hours the snail is placed on a separate stud with a star wheel, so that, instead of moving gradually, it is shifted at once, just before the hour is struck, in the same manner as in a repeating watch, the third wheel of the striking part has a large pivot in front, which projects through the plate, on which the gathering pallet is squared. This gathering pallet in English clocks, in addition to its office of moving one tooth of the rack for each stroke of the hammer, also stops the train when the rack spur has been drawn over the last tooth of the rack, a long tail of this pallet then coming against a pin projecting from the rack. In French clocks, this stopping is effected by the addition of two extra pieces and an extra spring; one of these pieces drops down and catches a pin in the rim of the third wheel. Sir E. Beckett says this is a better plan than the English one; it is certainly no more effective, however, and is much more complicated and troublesome. The train is stopped more easily at the radius of the wheel than near its centre, but I have never heard of a pivot having been broken off by the contact of the gathering pallet with the pin in the rack. The old-fashioned clocks had the bell at the top, and the hammer stalk parallel to the side of the frame; and, in this case, the hammer spring (usually made of iron) was planted inside the pillar plate. The spring had its upper end bent or forged into an angle, and a projection

of the hammer stalk resting upon the flat head of the spring served as a buffer for the hammer, and prevented the jarring which would take place if the hammer were allowed to fall against the pillar. In all clocks that strike on a bell, spring, or gong, and in bracket clocks where the bell is placed at the back for convenience, the hammer arbor is brought through the back plate, and pivoted into a high cock. In this case the hammer is usually placed horizontally, and a spring is screwed on to the cock, which comes in contact with the hammer stalk, and keeps the hammer free from the bell after it has struck it. The pin wheel has eight pins set in its rim for lifting. The hammer tail on which these pins act must be left as long as possible; it should be shortened until when it drops off one pin it will not quite reach the next, but be a little distance from it. The third wheel must turn once for every pin, or eight times for one of the pin wheel; and the fourth wheel must make some equal number of turns for one of the third wheel.

The numbers of wheels and pinions vary considerably in clocks, but can be easily calculated. (*See* pp. 57–60.) The train in common use is generally, for the striking train :—

	Main wheel.	Pin wheel.	Third.	Fourth.	Fly.
Wheel . .	84	64	56	50	—
Pinion . .	—	8	8	7	7

Going train, with seconds pendulum :—

	Main.	Centre.	Third.	Escape.
Wheel . .	96	64	60	30
Pinion . .	—	8	8	8

For a clock with half seconds pendulum, a suitable train is :—

Striking.		Going.	
Wheels.	Pinions.	Wheels.	Pinions.
84	—	96	—
64	8	84	8
56	8	80	8
50	7	30	7
Fly . .	7		

with sixteen turns on the fusee or barrel to allow the clock to go and strike for eight days.

In finally adjusting the striking part, care must be taken that the hammer tail when it falls from one pin allows the pin wheel a little run before the next pin comes in contact with it, as, if it does not, the clock is likely to stop striking when the oil becomes a little thick. In putting the clock together, the third wheel pinion must be shifted in the pin wheel until the tail of the gathering pallet is quite close to the pin in the rack that stops it, otherwise the pin-wheel will have too much run after the hammer has dropped. The pin in the fly wheel should also be close to the projecting end of the lifting piece, and not at the back of it, for the same reason.

The dial wheels may have any convenient number of teeth, that will allow of the hour wheel turning once to twelve turns of the minute wheel. The escapements have been already so fully treated of that it is unnecessary to say anything about them here; the half-dead-beat is found best for clocks with short pendulums, and the recoil is usually applied to those with seconds pendulums. It is not usual to make a maintaining power for these clocks, but it is necessary if accurate timekeeping is aimed at, as, when a seconds pendulum is swinging with a recoil escapement, the pallets drive the wheel backwards if the power is taken off, and for every second the clock should go forward while being wound it will go back one second. However, when a clock is thought good enough to have a maintaining power it is thought good enough also to have a Graham dead-beat escapement, and is removed from the category of house clocks.

213. **Quarter Clocks** are different from those already described only in having an additional train of wheels to strike the quarters. A good many French clocks, and formerly some English ones, were made to strike the quarters and hours with the same train. They struck usually on two springs, and were called "Ting Tang" quarter clocks; but this kind of clock is never made here

now. The quarter barrel and great wheel must be larger than those of the hour part, but the principle of the striking work is the same, with rack hook, lifting piece, and quarter snail. The quarter rack is made to discharge the hours. The minute wheel has four pins in it, lifting the quarter lifting piece in the usual way; and when the rack falls into the lowest notch of the snail at the fourth quarter, a pin in it strikes the end of the rack hook of the hour part, releasing it from the rack, and allowing the rack arm to fall into the hour snail. The quarter rack in falling sets free a lever that is doing the duty of the lifting piece to the hour part; this lever is lifted up by a spring, and the end of it catches a pin in the end of the fly wheel, and prevents the hour train from moving until the quarters are struck, when the quarter rack, acting on the tail of this lever, draws it down again, and releases the pin in the fly wheel of the hour part, thus permitting the hours to be struck a few seconds after the quarters. This quarter train is always placed to the right of the going part, and the usual numbers employed are :—

	First wheel.	Second.	Third.	Fourth.	Fly.
Wheel . .	100	80	64	50	—
Pinion . .	—	8	8	8	8

If the quarters are struck on an octave of bells, the pins for lifting the hammers are set on a barrel in the following order :—

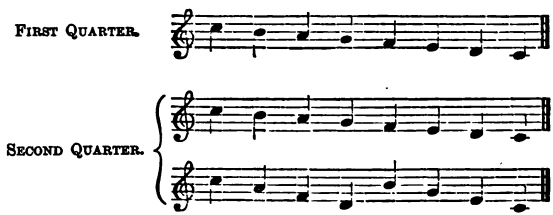

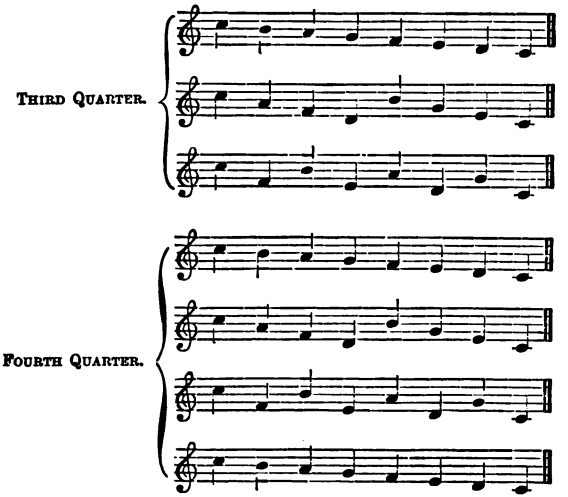

If struck on four gongs or bell springs, the Cambridge chimes are used. The notes of these gongs must not follow one another, as in the bells throughout, but the lowest, or fourth, must be a musical fourth below the third, and the gong on which the hour is struck one or two notes lower.

The following are the Cambridge chimes, written an octave lower to keep them in the lines :—

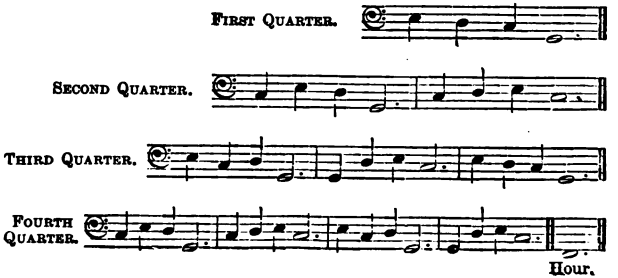

214. **Astronomical Clocks or Regulators** have no striking part to them, in order to avoid all complication; and as the performance of these clocks depends mainly on their escapements and pendulums, both of which have been treated of under those heads, little need be said of their construction. In setting out the caliber, the important thing to observe is the position of the hands on the dial. If the dial is a twelve-inch one, as is usual, the escape wheel hole should be marked in a straight line above the centre hole, at a distance of 2·5 inches; and as the hour hand, to avoid friction, is carried on the arbor of a wheel that coincides with the great wheel, and is geared into it (or rather, into a smaller wheel with an equal number of teeth that is screwed on to the back of the great wheel), these wheels must be small enough to allow of the great wheel being planted considerably below the centre wheel, and to the right of it, as then the line will fall on the inside of the barrel, and the friction on the barrel pivots, as in a left-handed fusee watch movement (*see* p. 68), will be the difference between the weight and the resistance, instead of the sum of the two. But, as the weight must not come down in the middle of the case and in front of the pendulum, a barrel with a worm cut on it should be placed in brackets, screwed to and projecting from the left-hand side of the frame, at a sufficient distance to bring the weight down in the left-hand corner of the case, and as near the front as possible. The line should be fixed in front of the barrel, and not next the great wheel (which is the usual method), as then the weight in descending gets more out of the way of the pendulum as it unwinds the line. The well-known influence of swinging pendulums on pendulous weights in proximity to them renders this point of keeping the weight at a sufficient distance from the pendulum when it reaches the level of the bob of considerable importance to the good performance of the clock.

For a regulator of no great pretensions, the following is a suitable train, with a great wheel of about three

inches in diameter, the others diminishing proportionately :—

	Great wheel.	Centre.	Third.	Escape
Wheel . .	144	96	90	30
Pinion . .	—	12	12	12

They are, however, usually made with higher numbers, and, of course, larger wheels, otherwise the teeth would not be strong enough. In the best regulators, the following is the usual train :—

	Great wheel.	Centre.	Third.	Escape.
Wheel . .	192	128	120	30
Pinion . .	—	16	16	16

The pallets should be jewelled, but if the pivot holes are well made and of the best brass, I see no reason for jewelling them, as the objection to long holes in watches does not obtain here, and they will last a long time without wear. Much of the accuracy of the going of the clock depends on the way in which it is fixed. The case should have a very solid back screwed to the wall some distance from the floor, and the pendulum should be hung on a strong cock screwed to the back of the case, and in such a position that the bending point of the spring will be exactly opposite the pivot of the pallet arbor. The crutch should have beat screws, for adjusting the beats, and the clock be placed where there are no air currents.

215. **Turret Clocks.**—Until a comparatively recent date, public clocks in England did not keep good time, the dead-beat escapement of Graham, that gives such good results in astronomical clocks, not being adapted for clocks that are subject to external disturbance or have a varying motive force. The pin wheel and recoil escapements were most commonly used, and various forms of remontoirs were from time to time applied here to large clocks, and in France, where public time was considered of more importance than it was in this country, the latter were in common use. The remontoir

is an arrangement not in the escapement, but in the upper part of the going-train, by which a weak spring is wound up, or a small weight is lifted, that gives impulse to the escape wheel at short intervals, by which it was sought to counteract the irregularities in the impulse that were caused by a coarse train, etc., and the varying pressure of the wind, etc., upon the hands. But these remontoirs were complicated and delicate, and have now been entirely superseded by the double-three-legged gravity escapement.

The revolution effected in the clock trade since the design and construction of the great Westminster clock (1851—9) by Sir Edmund Beckett, and the improvements made by him in the escapement, striking parts, etc., created a revival on a large scale of the factory system of turret clockmaking in this country, a detailed description of which is beyond the scope of the present work. To anyone interested in the manufacture of large clocks, however, I would recommend a study of Sir Edmund's excellent work on the subject.

The numbers of trains, sizes of wheels, fall of weights, etc., being governed by the available space and the height and formation of the clock tower, the details of the clock should be considered in relation to this accommodation by the maker, who should so design his clock as to utilise to the utmost the space at his disposal.

INDEX.

ADDENDA of pinion leaves, 50, 51
Adjusting rod, 83, 93, 106
Adjustment of chronometers, 32, 227, 228, 241
— — the balance, 32, 227, 228, 241
— — — chain, 93
— — — fusee, 16, 63, 65, 66, 71
— — — mainspring, 66, 71, 78
— — — maintaining power, 65, 66
Ahaz, King, 8
Airey, Sir G. B., 16, 53, 238, 256, 257, 290, 316
Alfred the Great, King, 9
American clocks, 15
Anchor escapement, 292—295
Angular measurement of lift, 139
Anne, Queen, 20
Annual Greenwich trials, 18, 26, 27, 30 257, 258
Applying balance spring, 100, 221, 225, 226, 227
Apprenticeship system, 35, 36
Arbor, Barrel, 73, 88
— centre wheel, 84
Arcs of vibration, 18, 25, 209, 211, 212, 283, 299
Arnold, John, 24, 155
Arnold, J. R., 260
Arnold's chronometer, 24
— compensation balance, 22
— cylindrical spring, 25
— escapement, 24, 25, 155, 180, 181
Astronomer Royal, 23, 29, 313
Astronomical clocks, 15, 330, 331
Attaching the dial to a watch, 105
Attachment of the mainspring, 70, 72, 74, 75
Austrian clocks, 15
Auxiliary comp nsation, 27, 242—257
Axis of suspension (pendulum), 281

BAILEY, Francis, P.R.A.S., 288
Bain, Alexander, 312, 313
Balance-spring, The, 205—227
— — curb-pins, 99, 100, 103, 211
— — Cylindrical helical, 25, 208, 222
Balance-spring, the, Blocks for making, 222, 223
— — — — Invention of, 25, 208
— — — — Length of, 223, 227
— — — — To apply, 225, 226, 227
— — — — To form the curves, 226
— — — — To harden and temper, 224
— — — — To polish and blue, 224, 225
— — Elasticity of, 18, 206, 210, 213, 214, 228, 232
— — Electro-gilt (Dent's), 212
— — Glass, 212, 213, 214
— — Gold, 214
— — Hand and tool made, 207
— — Invention of, 18, 206
— — Isochronism of, 18, 25, 206, 208 209
— — Lengths of, 209
— — Long and short arcs of, 211, 212
— — Lutz's, 207
— — Materials for, 213, 214
— — Number of turns of, 209
— — Old-fashioned Swiss stud, 102
— — Ordinary volute, 210
— — — — Spring-box and winder for, 218
— — — — To apply, 100
— — — — To harden and temper, 218, 219
— — — — To make, 217
— — — — To polish and blue, 219, 220
— — Overcoil, or "Breguet," 102, 208, 220
— — — — Curve, 221, 222
— — — — Index bad for, 222
— — — — Length of, 210, 211
— — — — Pinning in, 221
— — — — Winder for, 220
— — Palladium (Paillard s), 214, 229
— — Permanent loss of elasticity of, 215, 225
— — stud and index, 99, 100
— — To de-magnetise, 215—217

Balance-spring, To recarbonise wire for, 217
— — To select wire for, 217
— — to time in positions, 211, 212
Balance, The (*see* Compensation balance).
— Moment of inertia of, 229
— Radius of gyration of, 229
Bankings, 19, 127, 141, 157, 168, 173, 174, 178, 187, 203
Barlow, Edward, 19
Barometric error of pendulum, 283
Barraud and Lunds, 318, 319
Barrel and fusee, 41, 44, 63
— arbor, 73, 88
— hook, 70. 72, 81, 89
— Going, 72
Beaumarchais, 258
Becket, Sir E., 30, 37, 68, 229, 241, 283, 297, 332
Berne, Canton of, 124
Berthoud, 11, 38, 129, 155, 227
Bevelled wheels, 51, 52
Bloxam, Mr., 7
Board of longitude, 21, 23, 24
Bolt and joint, 109
Bramwell, Sir Frederick, 37
Brass edge for dials, 44
— for movements, 42
Breguet, A., 71
— spring, 102, 208, 220

CALIBRE, or caliber, 195
Cambridge chimes, 329
— transactions, 52
Candle clocks, 9
Cannon pinion, 61, 62, 96, 105
Caron, Peter, 258
Centre of gravity, 278
— — oscillation, 278, 279
— — percussion, 278
— pinion, 55, 57, 58, 60, 84, 86, 107, 108
Chain, Fusee, 41, 44, 86, 93, 106
Chalfont, W. W., 272
Charles V., 10, 17, 124
Charles I., King, 18
Chronometer escapement, 24, 25, 155—176
— — Action of, 157
— — Arnold's, 24, 25, 155
— — bankings, 157, 168
— — depths, 163
— — Early forms of, 155
— — Earnshaw's, 26, 155
— — escape-wheel, 162, 163
— — impulse roller and pallet, 161, 162, 163
— — Invention of, 24, 25, 155
— — Lift in, 158
Chronometer escapement locking, 159
— — Marine, 164—169
— — — banking stud, 168
— — — detent, 167—169
— — — locking stone, 166, 167, 168
— — — pivots, 165, 166
— — — tool for measuring heights, 164
— — pivoted and spring detents, 155
— — Pocket, 169—176
— — — banking (horse-shoe), 173, 174
— — — detent, 172, 173, 176
— — — diameter of balance, 169
— — — escape-wheel, 169
— — — impulse roller and pallet, 169 -172
— — — locking-stone 175
— — — preparing the different parts, 169
— — — unlocking-roller and pallet, 171, 172
— — — unlocking-spring, 175
— — Present form of, 157
— — Proportions of, 158, 160
— — The detent, 168, 169
— — — long and short, 159, 160, 167
— — To make, 163
— Finishing, 80—85
— — to adjust maintaining power, 81
— — to adjust stop, 82
— — to face pinion, 84
— — to hook in mainspring, 80, 81
— — to plant fusee, 81
— — to polish wheels, 83
— — to spot plates, 84, 85
Chronometer maker to the Admiralty, 27, 258
Chronometers, 24, 25, 155—176
— Arnold's, 24, 25, 155
— Earnshaw's 26, 155
— Eight and two-day marine, 56, 57, 161
— movement making, 37
— Pocket, 56, 169
— system of manufacture, 161
— with going barrels, 71
Circular error (of pendulum), 13, 276
City and Guilds' Institute, 18
Clark, Latimer, 2, 215
Clement, William, 293
Clepsydræ, 8
Clockmakers' Company, 18, 23, 111
Clock making, 319—332
— trade, The, 14
Clocks, American, 15, 320, 321
— Astronomical, 15, 330, 331
— Austrian, 15, 320

Clocks, eight-day dials, 16, 321—327
— Electrical, 312—319
— French, 14, 320, 323
— German, 15, 320
— House, 319
— Imitation English, 15, 320
— Quarter, 15, 327—331
— Regulators, 15, 330
— Turret, 16, 331, 332
— at Exeter, 11
— — Peterborough, 11
— — St. Margaret's, Westminster, 11
— — St. Paul's Cathedral, 10, 11
— — St. Paul's, Covent Garden, 274
— — Westminster, 16, 332
Club-tooth lever escapement, 188
Cole, J. F., 186, 187
Compensated watches, 32, 213
Compensation balance, 22, 227—258
— — adjustment, 32, 227, 228
— — Arnold's, 22, 25
— — Auxiliary, 27, 227—242
— — Dent's, 29, 247, 248
— — Earnshaw's, 22, 26, 28
— — Eiffe's, 29, 244, 247
— — Failure or ordinary or "middle temperature error," 27, 30, 227—242
— — Hardy's, 29, 242, 243, 244
— — Hartnup's, 30, 248—250
— — — formula, 232
— — Invention of, 22
— — Kullberg's, 30, 253—255
— — Le Roy's, 22, 25, 252
— — Loseby's, 29, 30, 251, 252
— — Mercer's, 30, 255, 256
— — Molineux's, 29, 244, 247
— — Poole's, 30, 250, 251
— — to inferior watches, 32
— — Theory of, 227—242
— bar, (Airey's), 256, 257
— — Gridiron pendulum, 14, 21, 288, 289
— — Mercurial pendulum, 14, 285—288
— pendulums, 285—292
— — Ratio of expansion of metals, 285
— — Wood and zinc, or wood and lead, 14, 289, 290
— — Zinc and steel, 14, 290—292
Construction of wheel teeth, 48
Crank lever escapement, 38, 181
Crisp, W. B., 212
Crown wheel escapement (*see* Verge)
Crutch (pendulum), 281
Ctesibius, 9
Cumming, Alexander, F.R.S., 289
Curb pins, 21, 99, 100, 102, 211, 222
Cycloidal theory, 13, 275
Cylinder escapement (*see* Horizontal escapement)
Cylindrical balance spring, 25, 26, 208, 222—227

DEAD beat, (Graham) escapement, 21, 297, 308
— — Charles Frodsham on, 299, 300—306
— — escaping arc, 299
— — pallets, 297—299
— —, To draw, 307
De Beaufre Brothers, 110
Definition of time, 1
De la Rue's clock, 316
Denison, E. B., 16
Dent, Frederick, 29, 212, 213, 242
— E. & Co., 212
Dent's balance, 29, 247, 248
Depthing, 94, 96
Detached (chronometer) escapement, 24, 25, 155—176
Detent (chronometer), 155, 159—161
— (fusee), 44, 65, 94
Detents, Long and short, 159, 160
De Vick's clock, 10, 11, 124
Dial feet holes, 105
— wheels, 60—63, 96, 97
Dials, "Eight-day," 16
Diameter of wheels and pinions, 45, 48—50
Diamantine, 204
Dillmar, 10
Dipleidoscope, 7, 8
Dog screw, 110
Double-bottom cases, 108
— roller lever escapement, 176, 177, 180, 184
— three-legged gravity escapement, 308—311
Drivers and followers, 44, 45, 51
Duplex escapement, 129, 137—154
— — Action of, 139, 149
— — bankings, 141
— — depths, 140—144, 151
— — Drop in, 150—154
— — escape wheel, 137, 146, 150, 151
— — impulse teeth, 140, 146, 153, 154
— — — pallet, 140, 150, 152, 153, 154
— — in full-plate watches, 145
— — intersection of wheel and impulse pallet, 140, 141—150
— — Invention of, 129, 137
— — Lift in, 139, 140, 146, 147
— — Principle of, 137
— — Ruby roller, 139, 147—150, 152, 153
— — — — Notch in, 147—150, 153
— — Running of, 141, 145

Duplex escapement, Setting of, 145
— — To make, 150, 154
— — Unadaptability for going barrel watches, 139
Dutertre, Jean Baptiste, 137
Duty on watches, United States', 145

EARLY English clocks (imitation), 15
Earnshaw, Thomas, 22, 26, 155, 227
Earnshaw's balance, 26, 28
— chronometer escapement, 26, 155
Ecliptic, The, 5, 6
Edward I., King, 10
Eiffe's balance, 29, 244, 246
"Eight-day" dials, 16
— — chronometers, 57, 161
Elasticity, Hooke's law of, 18, 25
— of balance spring, 18
Electrical clocks, 312—319
— — Bain's, 312, 313
— — Jones's, 314—316
— — Ritchie's, 316—319
— — Escapement for, 316—319
Electro-gilding, 120, 121—123
Elizabeth, Queen, 10, 17
Engaging friction, 44, 45, 49
English clock trade, 14, 319—332
— watch trade, 34
— — trains, 53—63
Epicycloidal teeth, 46
Equidistant lockings in lever escapement, 190—195
Escapements (clock), 292—319
— — Dead beat (Graham), 297—308
— — De Vick's, 10, 11, 12
— — Gravity (Beckett's), 308—312
— — Pin wheel (Lepante's), 295—297
— — Recoil, 292—295
— — Ritchie's, 317
— (watch), 123—205
— — Chronometer, 24, 25, 155—176
— — Duplex, 129, 137—154
— — Horizontal, 126—137
— — Lever, 24, 38, 176—205
— — Verge, 10—12, 123—126

FACIO, Nicolas, 20, 110, 111, 114, 129
Factories, Watch, 34
Ferguson, James, 7
Finishing, Chronometer, 80—85
— Watch, 85—102
— wheels and pinions, 83
Fitting watch hands, 104
Fixing movement in case, 108
Flanks of wheel-teeth and pinion-leaves, 50, 51
Fog's patent pinion, 50
Forgery of English Hall marks, 34
— — — makers' names, 34
Four-legged gravity escapement, 311, 312
Freeing barrel, 80
French clocks, 14, 49
Friction, 44, 45, 49, 188
— on escape-wheel teeth, 188, 190
— on fusee pivots, 68
Frodsham, Charles, 27, 212, 228, 238, 239, 281, 286
— — on dead-beat escapement, 299—306
— W. J., 300
Full-plate watches, 39, 40, 41, 61
Fusee, Adjustment, 16, 38, 63, 71
— and barrel (size of), 44, 63
— cap and hook, 64, 67, 87, 93
— chain, 86, 93, 106
— collet, 64
— detent, 44, 65, 94
— maintaining power, 63—66, 106
— Number of turns on, 60, 66
— piece in top plate, 87, 88
— stop, 67, 68, 93
— To free great wheel on, 87
— To plant, 86

GALILEO'S discovery of the pendulum, 12, 274
Galileo, Vincenzo, 12, 274, 275
Gauges, Sir J. Whitworth's, 37
— Want of standard, 37
Gearing of wheels, 44—52
— White's, 48
Generating circles, 45, 46, 47
Geneva stop work, 75—77
Gerbert, 10
German clocks, 14, 49
Gilding, 120—123
Gimbals for chronometers, 33, 56
Gnomons, 8
Going-barrel, 71, 72, 75—78
Gothic vault, 48
Graham, George, 20, 21, 120, 126, 129, 180, 286, 297, 331
— escapement (*see* Dead beat), 297—308
Graham's mercurial pendulum, 21, 285—288
Gravity, Centre of, 278
— escapements, 21, 308—312
— — Action of, 308, 309
— — Double three-legged, 308—311
— — Four-legged, 311, 312
— — To set out, 310, 311
Great wheel of watch, 44, 55—60, 64, 66, 87

Greenwich observatory, 22, 23, 29, 316
— Meridian of, 3—6
— Standard clock at, 290
— time, 3
— trials, 18, 26, 27, 30, 257, 258
Gridiron pendulum, 14, 21, 288, 289
Grignion, Thomas, 275
Grossmann, Moritz, 190
Guildhall Library and Museum, 19
G, Value of, 277

HALLEY, Dr., 21
Hall marks in cases, 84
Hands, To fit, 61, 104
Hard brass, 42
Hardy's balance, 29, 241, 243, 244
Harrison, John, 20—23
Harrison's compensation, 21, 22, 288
— chronometers, 20, 21, 23
— escapement, 22
— maintaining power, 23, 63
— tomb, 23
Harris, Richard, 274
Hartnup, Professor, 27, 28, 232, 236
Hartnup's balance, 248, 250
— formula, 232, 239
— tables, 237, 238
Hautfeuille, L'Abbé, 179, 206
Hele, Peter, 17
Helical, or Cylindrical spring, 25, 26, 208, 222—227
— teeth, 47
Hengham, Sir Ralph de, 10
Herschell, Sir J., 37
Hewitt, Thomas, 36, 263
High numbered movements, 55
Hooke, Dr. Robert, 18, 19, 25, 137, 206, 274, 275, 293
Hooke's law, 18, 25, 206
— recoil escapement, 292—295
—Hooking in main spring, 80, 81, 89
Horizontal, or cylinder, escapement, 126—137
— — Action of, 127
— — adaptability to going-barrel watches, 134
— — Brass escape wheel, 20, 129, 181
— — Diameter of cylinder, 131
— — Drop on cylinder, 131, 133
— — Impulse curves of teeth. 131, 132
— — Invention of, 20, 126
— — Lift, 131
— — Lips of cylinder, 131
— — Overbanking in, 127, 129
— — Pivoting in cylinder, 135
— — Plugging cylinder, 136
— — Proportions of, 133
Horizontal escapement, Ruby cylinders, 20, 129
— — Thickness of cylinder, 131
— — Tool for measuring heights, 136
— — To harden and temper cylinder, 136
— — To make cylinder, 136
— — To plan, 130
— — To run in cylinder, 134
Horologe, horologium, &c., 9
Horological Institute, 19, 29, 35, 217, 232, 316
— Journal, 22, 232
Hours a watch will go, 59, 60
Hour wheel, 62, 96, 105
House clocks, 319—331
— of Commons, 24
Huntsman's steel, 172
Huyghens, Christian, 12, 13, 18, 179, 206, 274, 275, 293
Hypocycloid, 45

IMMISCH, Moritz, 209
Improved chronometer balances, 29
— going barrel, 76, 77
Index, Balance spring, 99
Involute teeth, 47
Interchangeable movements, 42
International exhibitions (1851 and 1862), 207, 238
— — Commissioners of, 207, 208
Isochronism of the balance spring, 18, 206, 208
— — — — —, conditions of, 18, 206, 208
— — — pendulum, 12, 13, 275
Italian computation of time, 2

JAMES II., King, 19
Jewel holes, 113, 116
— screws, 98, 116
Jewelling, chronometer, 84
— hole making, 113—116
— Invention of, 20, 110
— Objections to, 110
— Stones used for, 111
— Watch, 110
Jodin, Mons., 129
Jones', R. L., clock, 314, 116
Julius Cæsar, 8
Jürgensen, A., 71

KATER'S (Captain) pendulum, 279
Kendall, Mr., 23
Keyless watch, Napoleon's, 259
— — Madame de Pompadour's, 258

Keyless work, 258—274
— — Caron's, 258
— — Chalfont's, 272—274
— — Fusee, 267—274
— — Kullberg's, 270—272
— — Prest's, 259, 260
— — rocking bar, 51, 263—266
— — Swiss, 260—263
Kullberg's flat-rim balance, 253
— improved ordinary balance, 254

L'ABBE Hautefeuille, 179, 206
Lamb, Benjamin, 280
Lancashire movement making, 37—44
Lantern pinions, 49
Leaves, shape of pinion, 44, 47
— To find numbers of, 57—60
Left-handed movement, 68
Lepante's (pin-wheel) escapement, 295—297
Le Roy, Julien, 19, 22, 25, 181
— — Pierre, 129, 137, 155, 206, 252
Lever escapement, 24, 38, 176—205
— — action of, 176—178
— — banking pins, 178, 203
— — circular pallets, 190—194
— — club-tooth, 188
— — crank lever, 38, 181
— — depths, 202, 203
— — detached (Mudge's), 24, 38, 180
— — double roller, 176—178, 181, 184, 185
— — equidistant lockings, 190—194
— — escapement in angle, 203
— — escape wheel, 195, 197, 204
— — guard pin, 200—202
— — impulse pin, 199, 200
— — invention of, 24
— — lifting angle in, 184, 185
— — lockings, 178, 185, 192, 193
— — notch in lever, 201
— — Overbanking in, 178, 186, 187
— — Pallet angles in, 184, 185
— — — staff, 202
— — Proportions of, 195
— — rack lever, 179, 181
— — repellant (Cole's), 187
— — resilient (Cole's), 186
— — roller, 199, 200, 201, 205
— — semi-circular pallets, 195
— — sizes of, 195, 196
— — spring bankings, 187
— — steady pinning the cocks, 196, 197
— — straight line, 190
— — table roller, 38, 182
— — To make, 195—205
— — two pin (Savage's), 183
— Second order of, 159, 160
Lift in chronometer escapement, 158
— — duplex escapement, 139, 140, 146, 147
— — horizontal escapement, 131
— — lever escapement, 184, 185
Line of centres, 46, 183
Litherland, Peter, 24, 38, 179, 181
Liverpool observatory, 27, 30
— watch trade, 38
Low-numbered pinions, 55
Losety's balance, 29, 251, 252
Longitude, Board of, 21, 23, 24
— Lines of, 6
— Meridians of, 6
— of Greenwich, 3, 6
— Rewards for discovery of, 21, 23, 24
Lund's synchronising method, 318, 319
Lutz's balance springs, 207

MACHINE tools, 41, 42, 43
Mainspring, The, 69—80
— adjustment, 70, 71, 78, 106
— attachment, 70, 71, 72, 74, 75
— hook, 70, 72, 89, 90, 91, 92
— Hooking in, 80, 81, 89, 90, 91, 92
— Invention of, 17
— Length of, for going-barrels, 71
— Making, 78
— Number of coils in, 72, 77
— Pivoted brace for, 72
— tapered, 70, 71, 79
Maintaining power, 63, 65, 66, 81, 83, 106
Marine chronometers, 20, 21, 23, 24, 25
Maskelyne, Dr. Nevil, 23
Massey, Thomas, 38, 181
Mean solar time, 6
Medici, Prince Leopoldo de, 12
Mercer's balance, 30, 31, 255, 256
Mercurial gilding, 121, 122
— pendulum, 14, 285—288
Meridian of Greenwich, 3—6
— To trace a, 6, 7
Metrical system, 37
"Middle temperature error," 27, 30, 227—242
Minute wheel, 62, 96
Molineux's balance, 29, 244, 247
Moment of inertia, 229
Motion making, 60
— wheels, 60—63, 96, 97
Movements, Marine chronometer, 56, 57
— Watch, 37—44
— — full-plate, 39, 40, 41, 61
— — High-numbered, 55
— — Interchangeable, 42

Movements, Watch, Lancashire, 37—44
— — Left-handed, 68
— — Machine-made, 37
— — Plates for, 42
— — Three-quarter plate, 40, 61
Mudge, Thomas, 23, 24, 68, 120, 180
— — his chronometer, 23, 24
— — — lever escapement, 24, 38, 180

NAPOLEON'S keyless watch, 259
Nelthropp, Rev. H. L., 275
— — — — his treatise, 275
Nickel movements, 121
Number of coils in mainspring, 72, 77
Numbers of watch trains, 53—63
Nuremberg watches, 17

OBSERVATORY of Greenwich, 22, 23, 29, 316
— — Liverpool, 27, 30
Ogive, 48
Oil, Watch, 112
Old clock at Exeter, 11
— — — Peterborough, 11
— — — St. Paul's Cathedral, 11
— — — — — Covent Garden, 274, 275
— — — Westminster, 11
Oldenburgh, Mr., 206
Old-fashioned spring stud,
Orologiario, Bartholomo, 10
Orreries, 9
Orrery, Lord, 9
Oscillation, Centre of, 278, 279
Oscillations, Number of, in pendulums, 277, 278
Overbanking in horizontal escapement, 129
Overcoil (Breguet) spring, 102, 208, 220

PAILLARD, Monsieur, 214
Palladium springs, 214, 229
Pallets, Chronometer, 161–163, 169—172
— Duplex, 140, 150, 152—154
— Lever, 190—195
— Verge, 124, 125
Pendulum, The, 274—292
— — application to clocks, 12, 274, 275
— — arc of vibration, 283, 299
— — Barometric error of, 283
— — Centre of gravity of, 278
— — — —oscillation of, 278, 279
— — Circular error of, 13, 276
— — crutch, 281
— — Cycloidal theory of, 13, 275
Pendulum, The, Discovery of, 12, 275
— — formula for finding time of vibration, 276
— — gravitation pendulum, 279
— — Isochronism of, 12, 13, 175, 176
— — necessity of compensation, 14
— — principle of compensation, 14
(*see* Compensation pendulums)
— — regulation, 284
— — shape of bob, 283
— — sidereal seconds, length of, 279
— — Simple, 278, 279
— — Suspension of, 279—281
— — To find lengths of, 277
Philippe, Mons., 74
Phillips, Mons., 208
Pillar plates, 43, 44
Pinion, Cannon, 61, 62, 96
— Centre, 57, 58, 60, 84, 86, 107, 108
— Fog's patent, 50
— making, 42, 43
— wire, 42—51
— Wheels and, 44, 52
Pinions, Addenda of, 48—51
— depths, 94
— Facing, 84, 322
— Lantern, 49
— of high and low numbers, 49
— Polishing, 84, 322
— shape of leaves, 45—48
— To find numbers of, 57—63
Pin-wheel escapement (Lepaute's), 295—297
Pitch circles, 45, 50
Pivots, shape of balance staff, 165, 166, 211
Pivoted brace in going barrel, 72, 91
— detent, 155
Pivoting in wheels, 94
Planetariums, 9
Planting wheels, 81
Plugging cylinder, 136
Pocket chronometers, 169—176
Polishing pinions, 84
— wheels, 83
Pompadour, Madame de, 258
Poole's balance, 30, 250, 251
Pope Sylvester II., 10, 124
Potance, 39, 40, 126
Power exerted by wheels on pinions, 53
Prescot, 38—40
Prest, Thomas, his keyless work, 259, 260
Proportion of adjusted watches, 32, 33

QUARE, Daniel, 19
Quarter clocks, 15, 327—331

RACK-LEVER escapement, 38, 179, 181
Radius of gyration, 229
— — oscillation, 278, 279
Ramsay, David, 18
Ratio of expansion of metals, 285
— — speed of wheels in train, 57, 58
Recoil, or anchor, escapement, 292—295
Regulators, 15, 330, 331
Reid, Thomas, 22, 55, 286
Repeating work, 19
Repellant-lever escapement, 187
Resilient-lever escapement, 186
Resistance of trains, 53
Rigg, Edward, M.A., 230, 231
Ritchie's electrical clocks, 316
— loaded pendulums, 318
— propelment, 317
Robert, H., 71
Rocking-bar keyless work, 51, 263—266
Roller, Duplex, 139, 147—150, 152, 153
— Lever, 178, 199—201, 205
Rollers, Chronometer, 161, 163, 169—172
— for tracing teeth, 48
Roman time, Ancient, 1
Roskell, Robert, 38
Royal Society, 111, 206
Rozé, Messieurs, 72
Running of duplex escapement, 141, 145
Ruby cylinders, 20

SAND-GLASSES, 9
Saunier, Claudius, 71, 72, 74, 124
Savage, George, 24, 183
— — his two-pin lever escapement, 183
Schoof, W. G., 134
Schools of instruction for watchmakers, 35, 36
Screws, Blueing, 98
— Jewel, 98, 116, 117
— Making, 42
— Polishing, 98
— Taps, 98, 117
— Tempering, 98
Set-hand piece, 104, 107
Shakspere, 17
Shepherd, William, 249
Ship's chronometers, 20—25
Sidereal clock at Greenwich, 290
— day, A, 2
— seconds' pendulum, 279
— time, 2
Simple pendulum, 13, 278, 279
Smeaton, John, F.R.S., 290
Snailing, 118—120
— barrel arbor, 73, 88, 89
Society of Arts, 29
Solar time, 5
— — Mean, 5
Special loan collection, Kensington, 12, 212
Spotting, 84
Spring detent, 155, 168, 169
Standard gauges for watchmakers, 37
— of time wanted, 17
— sizes of movements, 36, 37
Steady pinning, 196, 197
Steel, Huntsman's, 172
St. Margaret's (Westminster) clock, 11
St. Paul's Cathedral clock, 10, 11
— — (Covent Garden) clock, 274, 275
Stogden's repeating work, 19
Stones used for jewelling, 111
Stoppings, 86, 88
Stop, Fusee, 67, 68, 93
Stop-work, going-barrel, 75
Straight-line lever escapement, 190
Suggestions as to finishing, 98
Sun-dials, 8
Suspension of pendulums, 279—281
Swiss lever watches, 190
Synchronised clocks, 318, 319
Sylvester II., Pope, 10, 124

TABLE of expansion of metal, 285
Table-roller lever escapement, 38, 182
Tables for construction of dead-beat escapement, 303
Tables for rating chronometers (Hartnup's), 237, 238
Tables, Clarke's transit, 2, 3
Teeth, Epicycloidal, 45, 46, 47, 50, 51
— Flanks of, 50
— Helical, 47
— Hypocycloidal, 45, 46, 47
— Involute, 47
— Shape of, 44—48
— To find numbers of, 57—63
Thermometer kerbe (Harrison's), 22
Thinning wheels, 83, 86
Time, Ancient Roman, 1
— Chinese, 2
— Definition of, 1
— Equation of, 6
— Italian, 2
— Mean solar, 6
— Sidereal, 2
— solar or civil, 5
Timing adjustments of chronometers, 31, 32
— screws, 31, 32

Tool for taking heights in chronometers, 164
Tools, Machine, 41, 42, 43
Tompion, Thomas, 19, 126
Tracing a meridian, 6
Trains, 53
— Duplex, 53, 141
— Fast and slow, 54—57
— Horizontal, 54
— Lever, 54
— Marine chronometer, 56
— Numbers of, 43, 54—60
— Pocket chronometer, 53
— Resistance of, 53
— To calculate train, 57
— Verge watch, 54
Transit instrument, 2, 3
"Treatise on Modern Watchmaking," 124
— Rev. H. L. Nelthropp's, 275
Turns, Number of, for fusee or barrel, 59, 60
Turret clocks, 331
"Two-day" marine chronometer, 57, 161
Two-pin lever escapement, 183
Tyrer, Thomas, 137

UNITED States' duty on watches, 145
Units of weights and measurement, 37
Uprighting in mandrel, 88

VALUE of G, 277
Varley, Walker and, 316
Verge escapement, 10, 11, 12, 124—126
— — Action of, 124
— — angle of pallets, 124, 125
Vibration, Arcs of, 18, 25, 124, 209—213, 283, 299
Vibrations, Number of, 53, 54
Viviani, 12
Volute, ordinary balance spring, 210
Vulliamy, B. St. Just, 280, 281, 300, 302

WALKER and Varley, 316
Want of standard gauges, 37
— — — of time, 17
Watch and chronometer movement making, 37—44
— examining, 103—108
— finishing, 85—102
— gilding, 120—122
— jewelling, 110—118
— trade, English, 34, 35
— — in Birmingham, 34
— — — Clerkenwell, 34
— — — Coventry, 34
— — — Liverpool, 34
Watches and chronometers, 17, 18
Water clocks, 8
Westminster clock, 16, 332
— old clock, 11
Wheatstone, Sir Charles, 37, 313
Wheel, Arms, 43
— Hour, 62, 96
— Minute, 62, 96
— teeth, Shape of, 45—49
— — Construction of, 48
— — Flanks of, 50
— — Generating circles for, 45, 46, 47
— — To find numbers of, 57—63
Wheels, To polish, 83
— To turn, 83, 86,
— Trains of, 53
— and pinions, 44—52, 94
— — — Bevelled, 51, 52
— — — depths, 94
— — — Diameters of, 49—50
— — — Dividing off, 51
— — — Gearing of, 47—49
— — — Lead of, 48 49
— — — Motion, 60—63
— — — Pitch circles of, 45, 48—51
Whitehurst, John, 281
White's gearing, 48
Whitworth, Sir Joseph, 37
— gauges, 37
Willis, Professor, 49
Winding squares, 107
Wright, T. D., 210
Wycherley, John, 36, 41, 43

CASSELL AND COMPANY, LIMITED, BELLE SAUVAGE WORKS, LONDON, E.C.